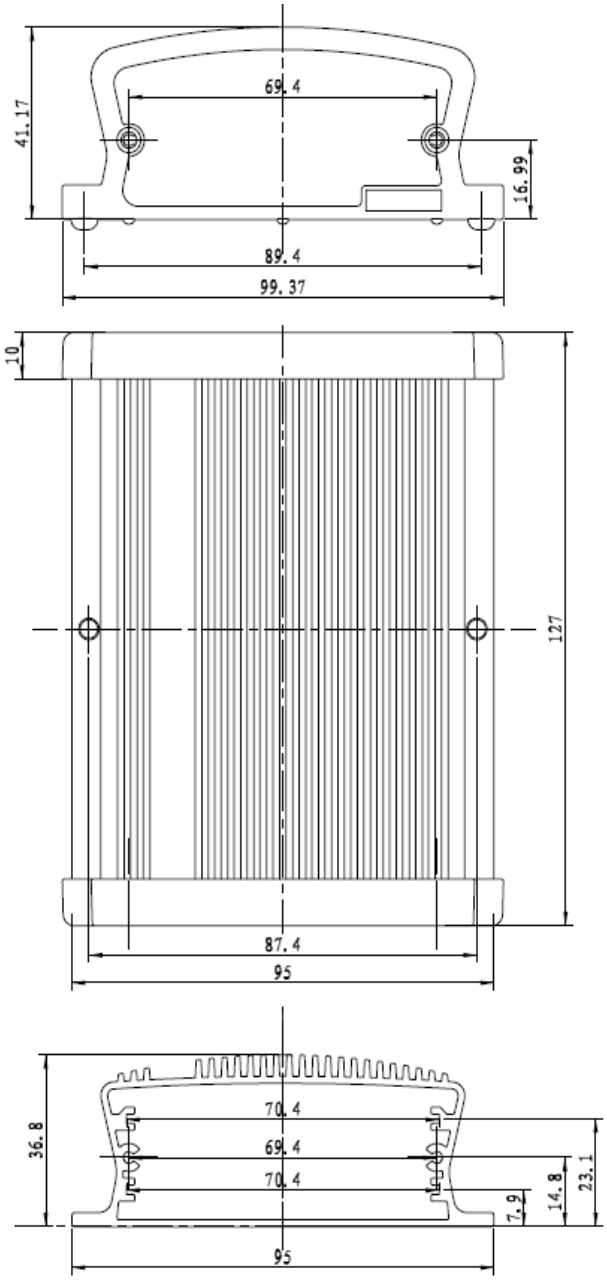
41.17
69.4
16.99
89.4
99.37
10
127
87.4
95
36.8
70.4
69.4
70.4
14.8
23.1
7.9
95

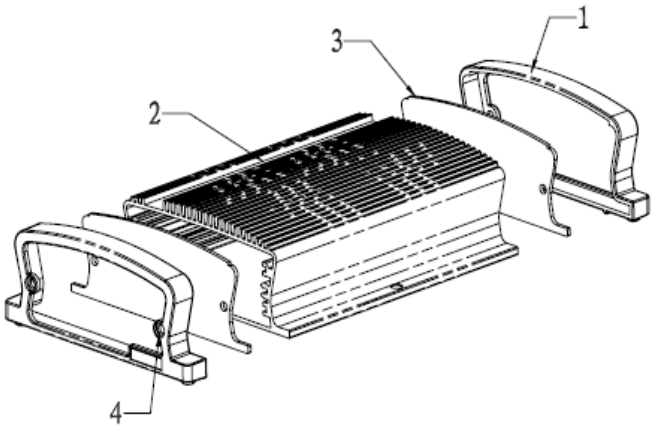
1
2
3
4

CP-17-38A	