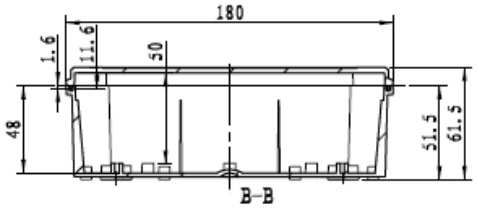
180
1.6
11.6
50
48
51.5
61.5
B-B

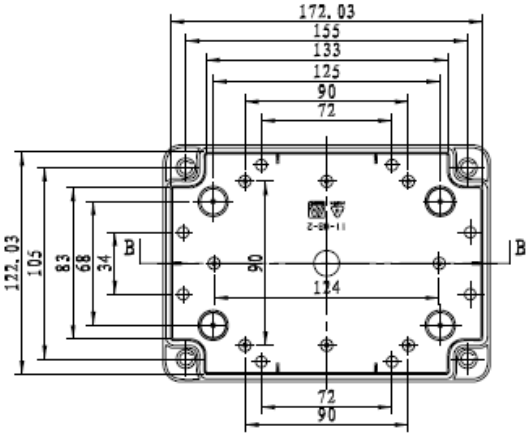
172.03
155
133
125
90
72
122.03
105
83
68
34
B
B
90
124
72
90

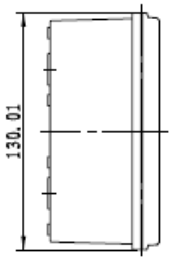
130.01

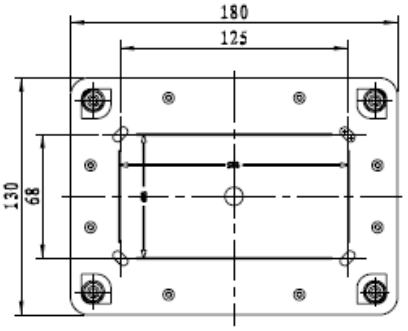
180
125
130
68

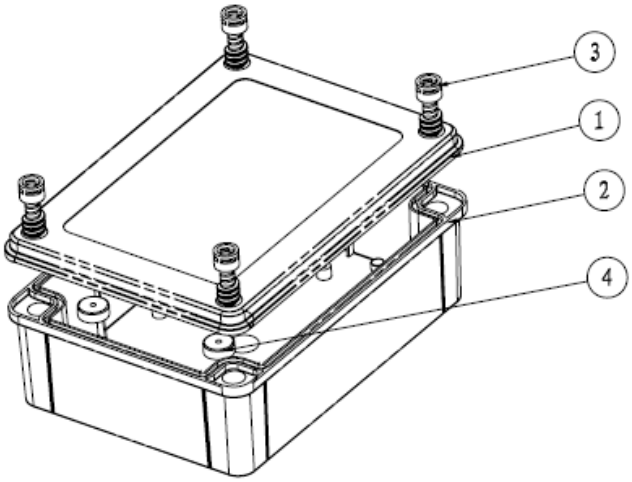
3
1
2
4

CP-11-98T	