Alle Rechte vorbehalten/ *All rights reserved*

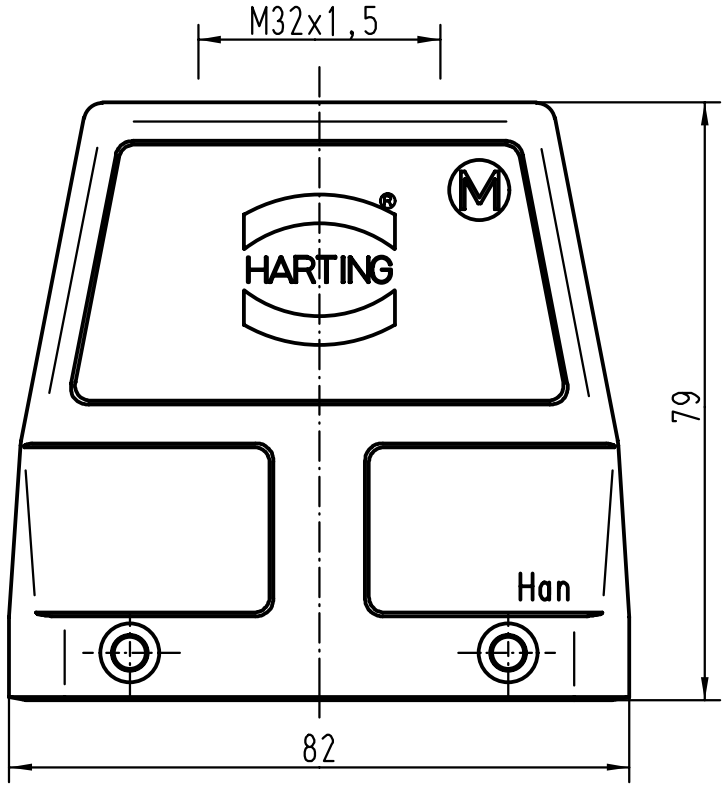


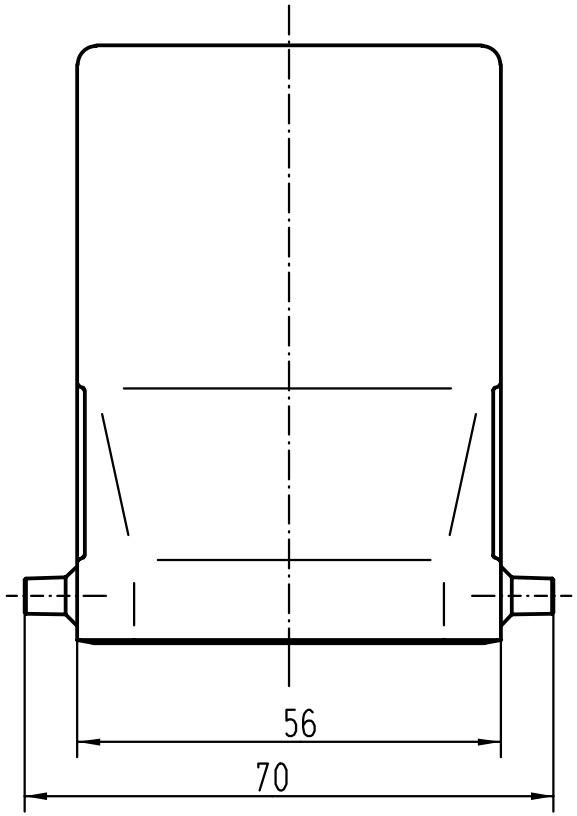


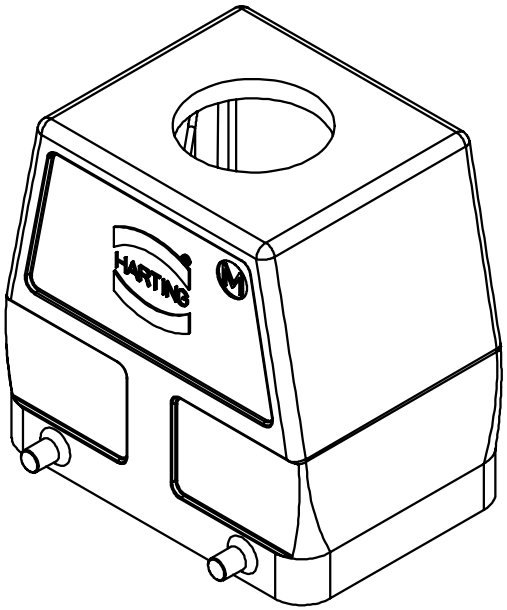


| | | | | | | |
|---|---|---|---|---|---|---|
| All Dimensions in mm<br>Original Size DIN A 4 | | | Techn. Character. | | | Nicht tolerierte Masse/ *Free size tolerances* |
| | | | | Dat. | Name | Massstab/*Scale* |
| | | | Detail. | 15.11.00 | Gä | 1:1 |
| | | | Insp. | | KR | |
| | | | Stand. | | | |
| | | | HARTING KGaA<br>D-32339 ESPELKAMP | | | Han 32A-gg-M32<br>ohne Zwischenstutzen /<br>*without adapter* |
| 28835 | | | | | | TB 19 20 032 0427 |
| Mod. | Dat. | Name | | | | Sub. |

Blatt/ *page* /