嘉尼企業股份有限公司CANAL ELECTRONIC CO.,LTD.

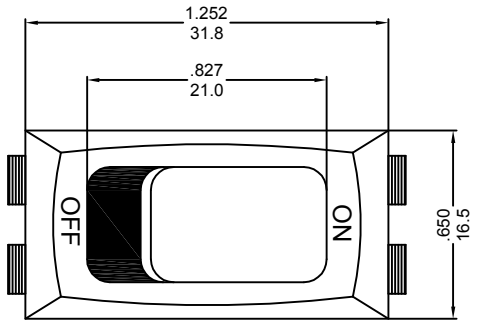

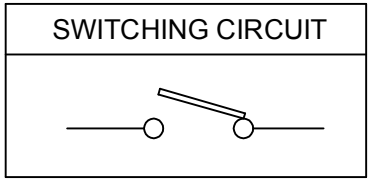

SPECIFICATION MODEL :"HB" SERIES
RATING:20A 125VAC (UL/CUL)
16A 250VAC (UL/CUL)
16(4)A 250V～T125/55 (ENEC15/CQC) △2
WITHSTAND VOLTAGE:1,000VAC 1 MINUTE.
CONTACT RESISTANCE:20mΩ INITIAL (MAX.)
INSULATION RESISTANCE: 500VDC - 100M Ω (MIN.)

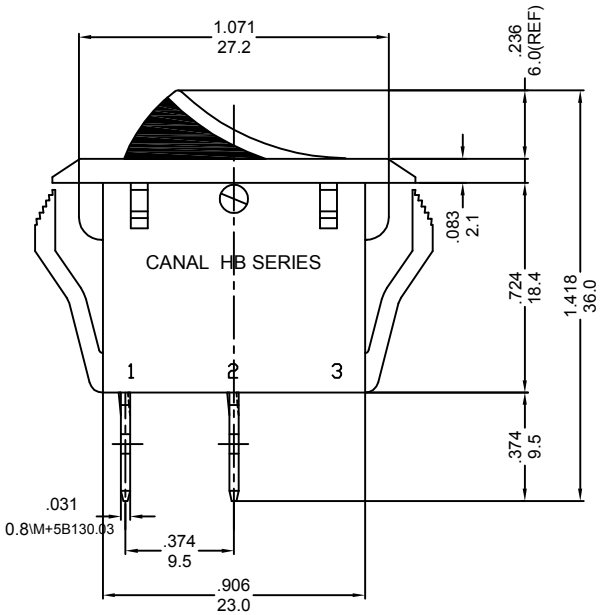

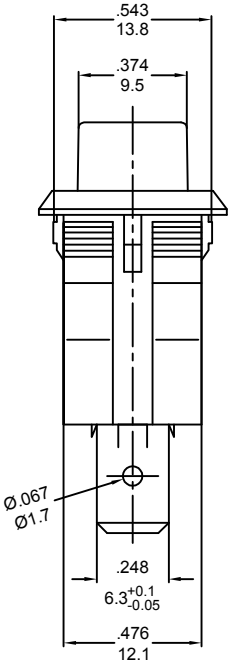

嘉尼工程
2023.04.20
文件管制章

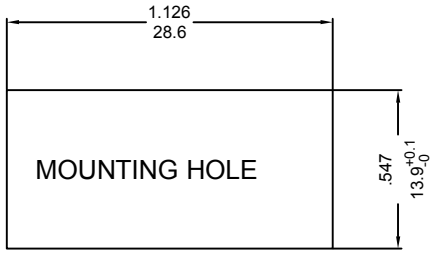

NOTE: TOLERANCES UNLESS OTHERWISE SPECIFIED:± .012/0.3 (in/mm)

REVISION	DESCRIPTION	REVISED BY	TOLERANCES				ANGLE ½°	UNIT	mm	PART NAME	HB SPEC DRAWING	DWG NO
△4			DRAWN BY	楊偉韶	DESIGNED BY	蔡劍	SCALE	2/1				S3394B
△3												
△2 2023.04.19	改VDE/ENEC10為ENEC15	楊偉韶	CHECKED BY		APPROVED BY		DATE	2010.02.05		PART NO	HB-110-C7N-BBG-AWC(B0B0G2)	
△1 2010.02.05	首次出圖	彭海華										