OptoSupply
Light It Up

10mm Low Current LED

OSXXXXA131A-1MA

■Features

- High Luminous LEDs
- Low Power Consumption
- UV Resistant Epoxy
- Specified at IF = 1 mA
- Water Clear Type

■Applications

- Background illumination
- Communications equipment
- Low power DC circuits
- General lighting purposes

■Outline Dimension

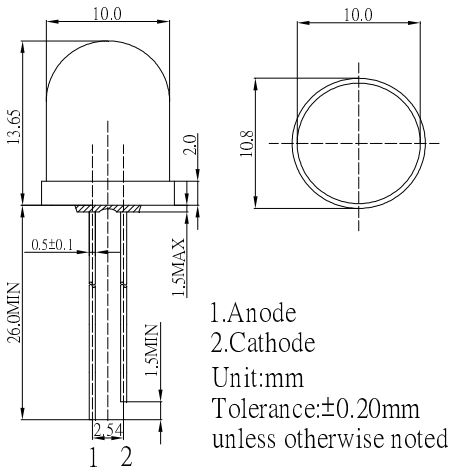

■Absolute Maximum Rating (Ta=25℃)

Item	Symbol	Value		Unit
		W/M/B/PG	YG/Y/O/R	
DC Forward Current	I_F	30	30	mA
Pulse Forward Current#	I_{FP}	100	100	mA
Reverse Voltage	V_R	5	5	V
Power Dissipation	P_D	102	66	mW
Operating Temperature	Topr	-30 ~ +85		℃
Storage Temperature	Tstg	-40~ +100		℃
Lead Soldering Temperature	Tsol	260℃/5sec		-

#Pulse width Max.10ms Duty ratio max 1/10

■Directivity

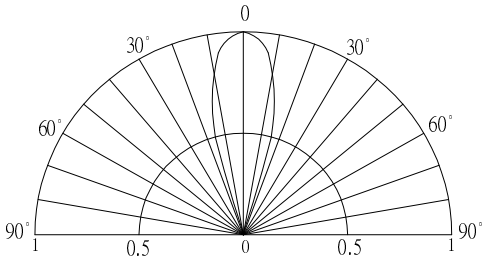

■Electrical -Optical Characteristics (Ta=25℃)

Part Number	Color			V_F (V)			I_R(μA)	Iv(mcd)			λD(nm)			θ1/2(deg)
				Min.	Typ.	Max.	Max.	Min.	Typ.	Max.	Min.	Typ.	Max.	Typ.
				I_F=1mA			V_R=5V	I_F=1mA						
OSW54KA131A-1MA	White	W		-	2.8	3.4	10	2180	3000	-	5500-8500K(X:0.27,Y:0.28)			30
OSM54KA131A-1MA	Warm White	M		-	2.8	3.4	10	1560	2180	-	2700-3200K(X:0.45,Y:0.41)			30
OSB5DAA131A-1MA	Blue	B		-	2.8	3.4	10	1120	1560	-	465	470	475	30
OSG58AA131A-1MA	Pure Green	PG		-	2.8	3.4	10	2180	3000	-	520	525	530	30
OSY5PAA131A-1MA	Yellow	Y		-	1.8	2.2	10	1120	1560	-	585	590	595	30
OSO5PAA131A-1MA	Orange	O		-	1.8	2.2	10	1120	1560	-	600	605	610	30
OSR5PAA131A-1MA	Red	R		-	1.8	2.2	10	1120	1560		620	625	630	30

*1 Tolerance of measurements of chromaticity coordinate is ±10% *2 Tolerance of measurements of dominant wavelength is ±1nm
*3 Tolerance of measurements of luminous intensity is ±15% *4 Tolerance of measurements of forward voltage is ±0.1V

LED & Application Technologies

ISO 9001: 2008

ATTENTION
OBSERVE PRECAUTIONS
ELECTROSTATIC
SENSITIVE DEVICES