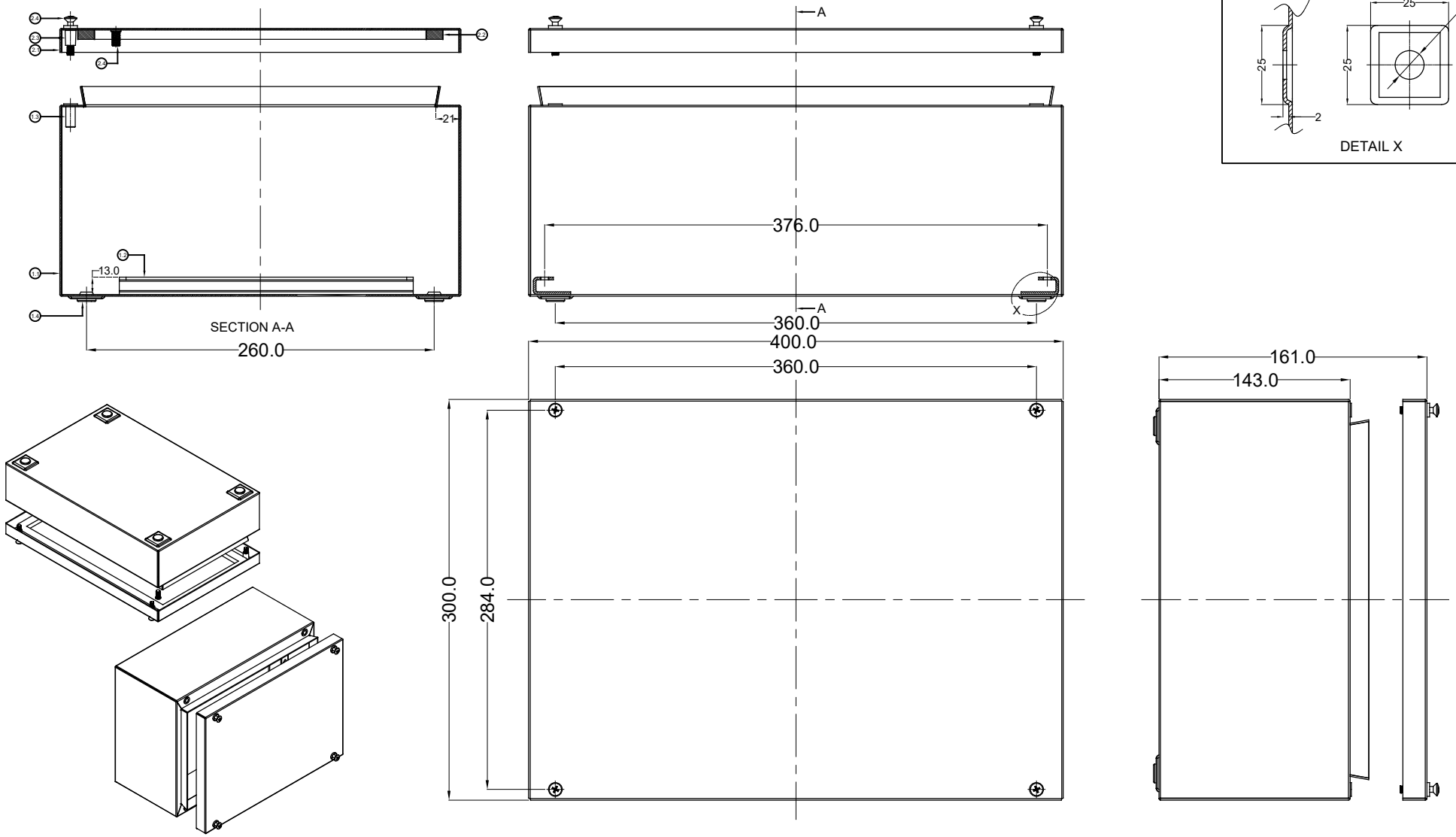

NOTE :-

1) ALL EDGES ARE BURR FREE
2) NON DIMENSIONAL RADIUS - 2..3mm
3) TOLERANCE AS PER DIN ISO 2768-cL
4) ALL CORNERS ARE FILLET WELDED AND GRINDED (240 GRAINS)
5) FINISH - RAL GRAY 7001 STRUCTURED

Sr No.	Material	UOM	Qty
1	Base Assembly		1
1.1	Base	Nos	1
1.2	Din Rail Mounting Channel	Nos	2
1.3	Blind NutSert M5 - SS 304 (Large Flanged)	Nos	4
1.4	Bottom Sealing Cap	Nos	4
2	Lid Assembly		1
2.1	Lid	Nos	1
2.2	Sealing Gasket	m	1.38
2.3	Plastics Insert for Screw	Nos	4
2.4	Stud EN ISO 13918-PTM6x12- A2-50 - SS 304	Nos	1
2.5	Oval Head Screw DIN 966 -M5x33 - SS 304	Nos	4

NO.	REV.NO.	DESCRIPTION	DATE	DRAWN	CHECKED
-	-	-	-	-	-

TITLE :- JUNCTION BOX ASSEMBLY 400 x 300 x 161

MATERIAL: GI STEEL 1.5mm Thick

FINISH: Powder Coated Grey RAL 7001

ALL DIMENSION ARE IN MM

-

Raychem RPG (P) Limited
Ceat Mahal Annexe,
Dr. Annie Besant Road ,
Worli , Mumbai 400030
Web : **www.raychemrpg.com**

	DATE	SIGN	NAME	
			RRPL	DESIGN
	01/04/15		MANOJ	DRAWN
	01/04/15		A.M.	CHECKED
	——		M.S.	APPROVED

SCALE | PARTNO. -

REV 00 | DRG. NO. GIJB15-A

PROPERTY OF RaychemRPG (P) LTD.
ALL RIGHTS RESERAVED AND/OR PHOTOCOPYING THIS DOCUMENT
TO A PERSON WITHOUT RaychemRPG (P)LTD. WRITTEN AUTHORIZATION IS PROHIBITED