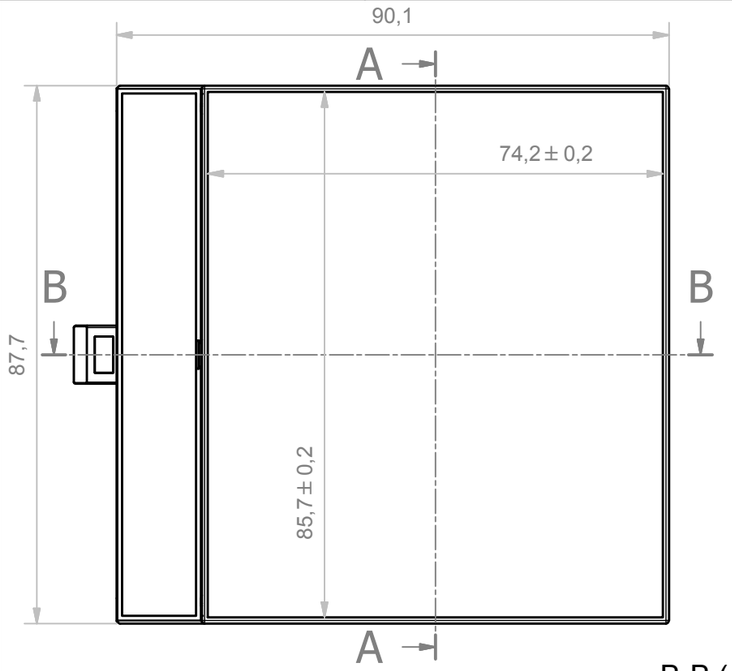

A-A (1 : 1)

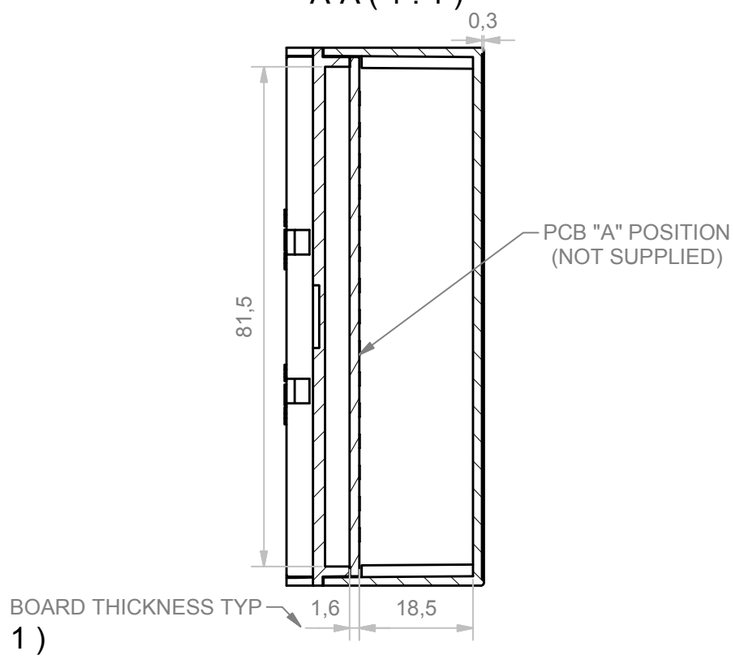

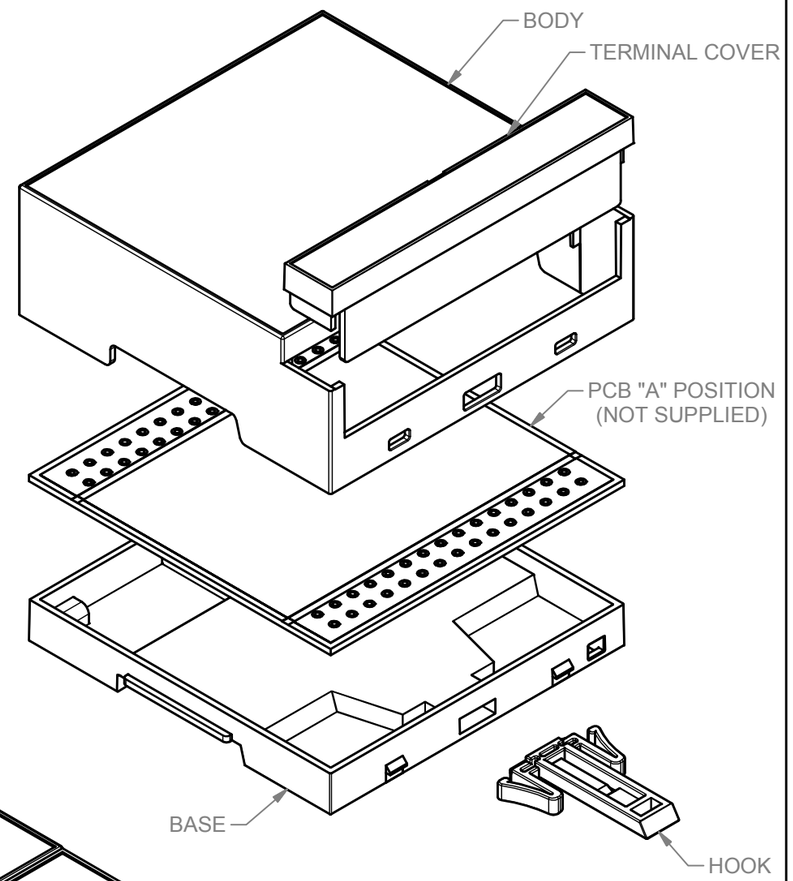

B-B (1 : 1)

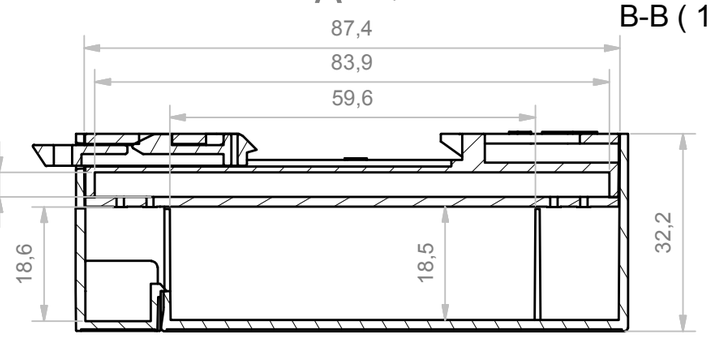

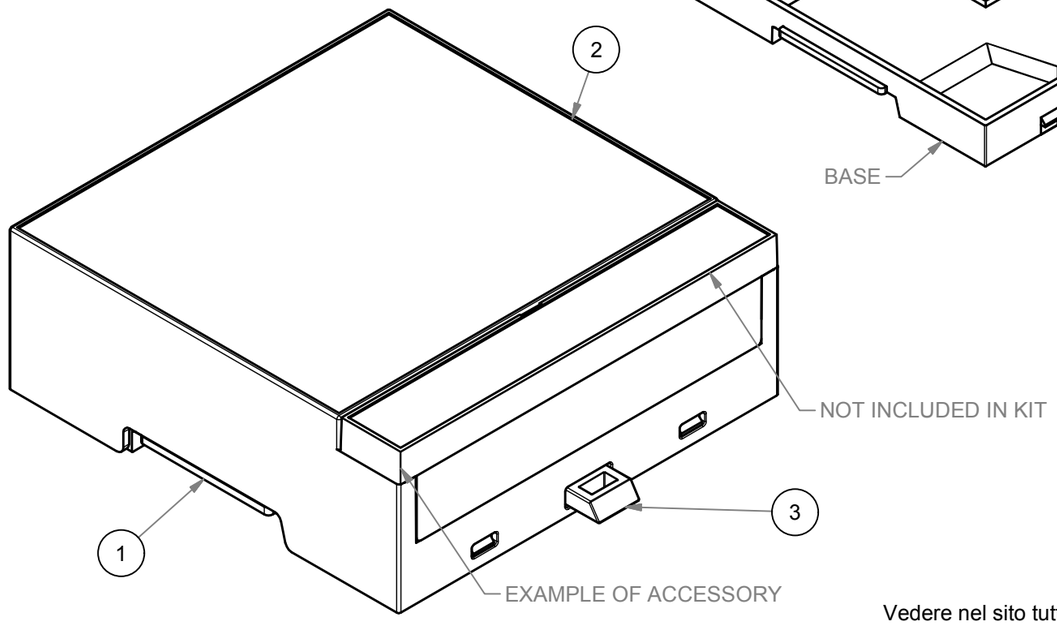

CIRCUIT BOARD "A"
(NOT SUPPLIED)

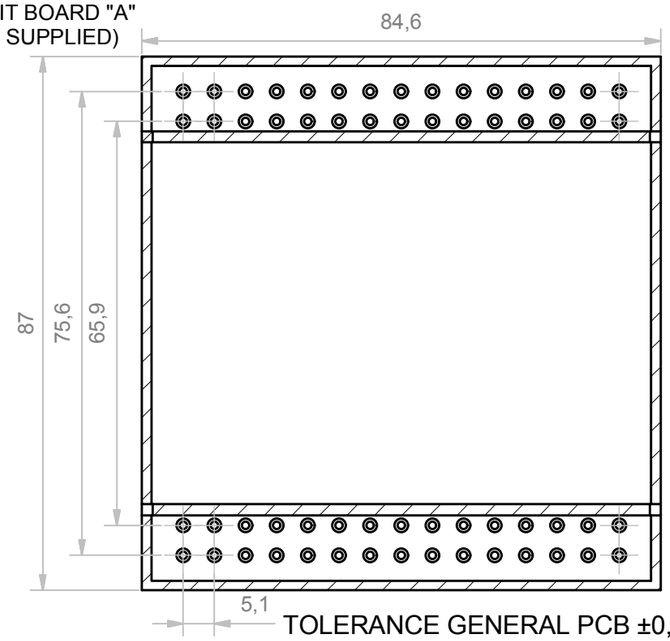

ZONE NO COMPONENTS

Vedere nel sito tutti gli accessori compatibili con il kit.
See in the web site all the accessories compatible with the kit.

TOLERANCE GENERAL PCB ±0,1 mm

RIF.	Q.TY	DESCRIPTION	DRAWING
1	1	BASE MODULBOX XT\XTS - 5M	1.001.01989
2	1	BODY MODULBOX XTS 5MHC33-B CLOSED COMPACT	2.250.00010
3	1	MODULAR HOOK LONG	1.001.01900

General Tolerance UNI EN 22768/1 Media (m)				
da 0.5 a 3	da 3 a 6	da 6 a 30	da 30 a 120	da 120 a 400
± 0.1	± 0.1	± 0.2	± 0.3	± 0.5

Scale:	Sheet nr.:	Drawed:	Checked:	Date:
1 : 1	1 / 1	A. I.	F.F.	06/03/2018

Dimension in mm

Material:

Weight: -

Volume: -

italtronic
www.italtronic.com
techcare@italtronic.com

Description:
CONTENITORE MODULBOX XTS 5MHC33-B CHIUSO COMPACT
ENCLOSURE MODULBOX XTS 5MHC33-B CLOSED COMPACT

Drawing nr. 3.250.00012

Rev. 01

5	4	3	2	1
Revision description				

Aggiornato cartiglio con nuovo codice (codice superato M-05177-00). Separata vista corpo con vista assieme. 06/03/18 I.A.

RESERVED PROPERTY:The present drawing cannot be reproduced or comunicated to 3d parties, even partially, without the authorization of ITALTRONIC Srl. Italtronic reserves to protect its own rights according to the law.