Order-No.	Shell Size / for No. of Contacts	A ±0.3	B ±0.1	C ±0.3	D ±0.3	E ±0.3	øF1 min - max	øF2 max I	Rubber bushing	G ±0.3	H ±0.3	J ±0.3	K ±0.3	L ±0.3	M ±0.5	N ±0.3	Q	R ±0.3
FMK2-K201	2 / 15	15.9	33.3	40	41	15.2	8.5 - 12.5	9	FKT3-4	23.3	43.5	12.1	25.8	27.9	21	16	84°	-
FMK3-K201	3 / 25	27.8	47	53.7	45	15.2	8.5 - 12.5	9	FKT3-4	31.7	47.5	12.1	39	41.4	25	16	80°	12.9
FMK4-K201	4 / 37	44.3	63.5	70.2	48	18.2	12 - 15	11.5	FKT5	48.2	50.5	15.1	55.5	57.8	23.2	21	80°	16.1
FMK5-K201	5 / 50	41.9	61.1	67.8	48	18.2	12 - 15	11.5	FKT5	45.8	50.5	15.1	53.1	55.5	23.2	21	80°	16.1

③ ④

øF1 = Cable diameter without rubber bushing
øF2 = Cable diameter with rubber bushing

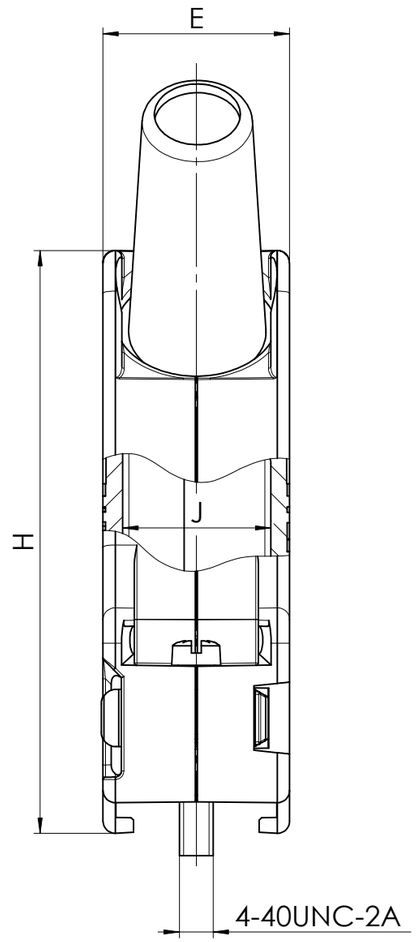

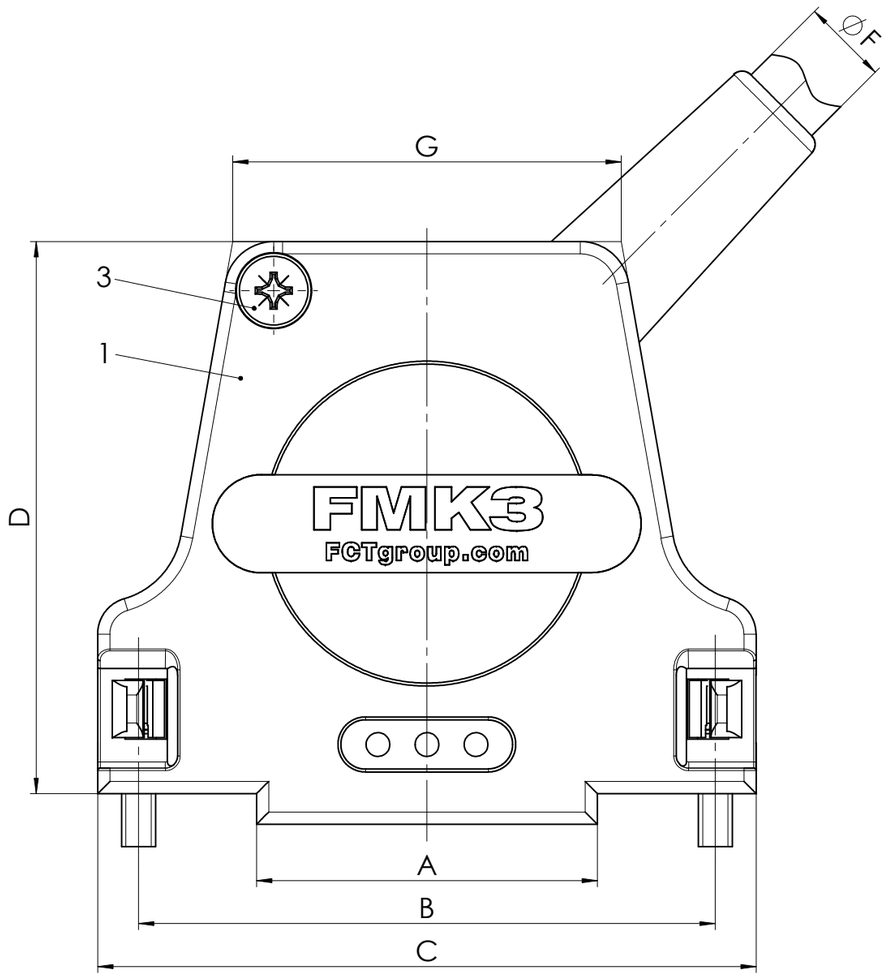

view of the hoods without lid

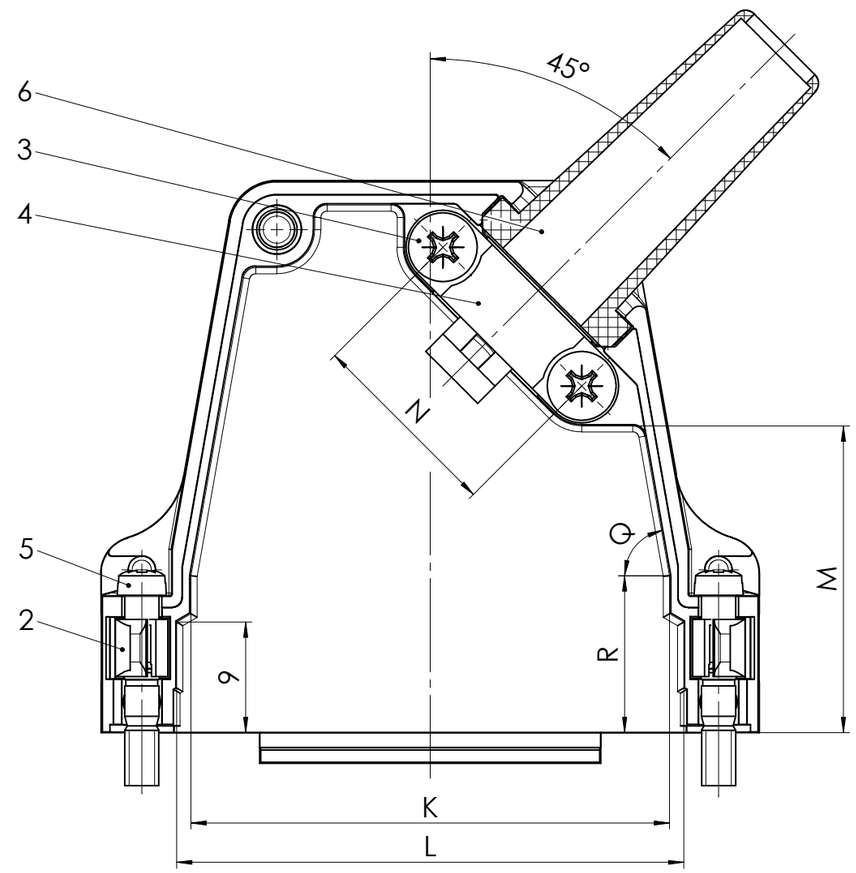

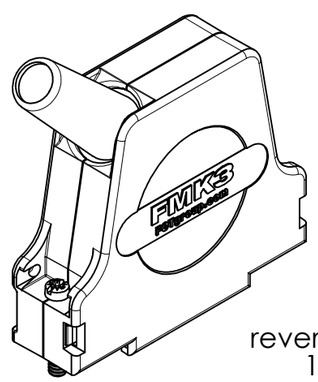

reverse side
1 : 1

RoHS compliant

④ max. torque are 40 Ncm
Part-No. 6 not mounted
FMK2-3-K201 with 3 screws (Part-No. 3)
FMK4-5-K201 with 4 screws (Part-No. 3)

No.	St.	Part	Type Description/Material	Surface plating/Colour/Class
6	1	Rubber bushing	TPE	black
5	2	Locking screw	FVS1/5-K1163 4-40 / Steel	nickel plated
4	1	Cable clamp	Steel	tin plated
3	3/4	Screw	Case hardened steel	zinc plated
2	2	Catch spring	PEI	black
⑤ 1	1	Hood	FMK2-5 / Zinc die-cast	nickel plated

REV.	DATE	CH.-NO.
5	21-03-2016	23610
4	04-07-2008	21925
3	23-08-2005	21680
2	07-07-2005	21625
1	02-02-2004	2 1317

Measurement without tolerance occ. to ISO 2768-m

SCALE 2:1

NAME / DATE
DRAWN Denzinger 27-10-2004
CHECKED ameyerrichte 22-03-2016

FCT a molex company

ORIGINAL: DIN A3-DRAWING AS A FILE

TITLE
Metal Hood

DWG.NO. FMK2-5-K201

REV. 5

REPLACEMENT FOR: FMK2-5-K201d_ACAD

PAGES 1

COMMENT:
ALL RIGHTS ARE RESERVED BY US FOR THIS DRAWING. WITHOUT OUR PRIOR CONSENT, IT MAY NEITHER BE DUBLICATED NOR MADE AVAILABLE TO A THIRD PARTY, AND IT ALSO MAY NOT BE IMPROPERLY USED BY TE RECEIVER, OR A THIRD PARTY.