Universal holder

HTR-UNI 2N G2 80

Part no.:10.01.03.00298

https://www.schmalz.com/10.01.03.00298

Universal holder for adjustable mounting of suction cups

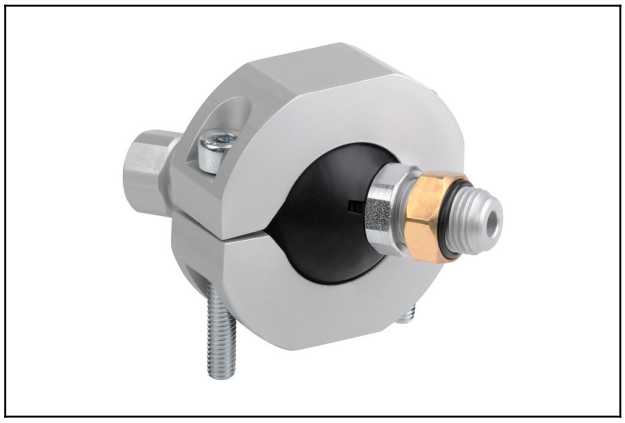

Cross-beam connection:

2 Sliding blocks

Suction cup connection: G1/4"-M

Overall length: 80 mm

Ambient temperature: 0 ... 80 °C

Design Data

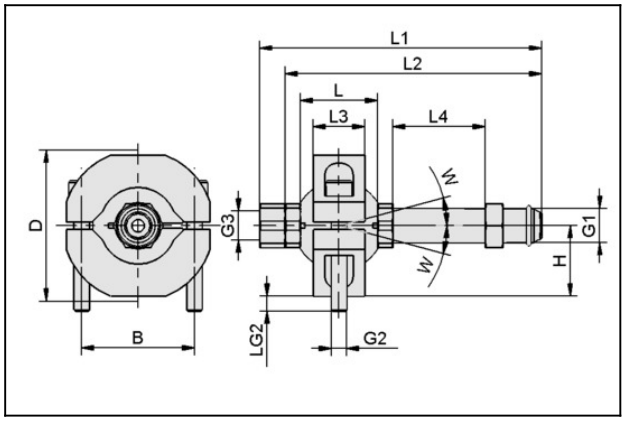

Attribute	Value
B	44 mm
D	59 mm
G1	G1/4"-AG
G2	M6-M
G3	G1/4"-F
H	27.5 mm
L	30 mm
L1	80 mm
L2	70 mm
L3	20 mm
L4	6 mm
LG2	6 mm
W	15 °

Universal holder

HTR-UNI 2N G2 80

Part no.:10.01.03.00298

https://www.schmalz.com/10.01.03.00298

Technical Data

Attribute	Value
Weight	200 g

Spare Parts

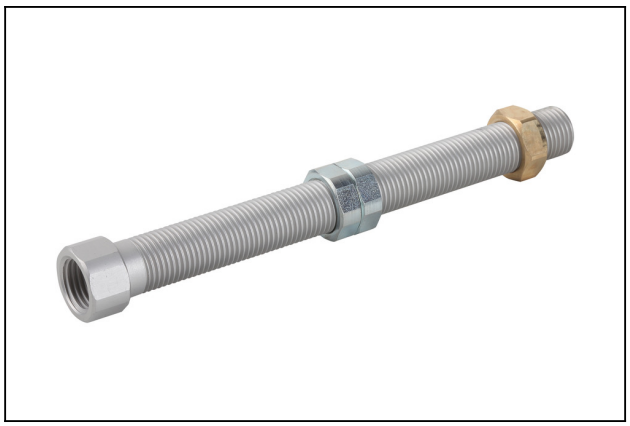

SAUG-ANB G1/4-AG 80

Part no.10.01.03.00292

Suction cup connection (rigid)

Suction cup connection: G1/4"-M

Length L: 80 mm

Accessories

STV-GE G1/4-AG 10

Part no.10.08.02.00251

Push-in Fitting, straight

Thread G1: G1/4"-M

External hose diameter: 10 mm

Material: Brass

Surface: nickel plated

Ambient temperature: -20 ... 80 °C

Universal holder

HTR-UNI 2N G2 80

Part no.:10.01.03.00298

https://www.schmalz.com/10.01.03.00298

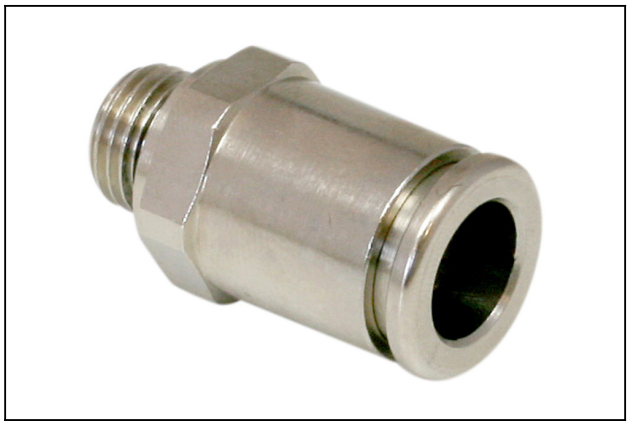

STV-GE G1/4-AG 12

Part no.10.08.02.00208

Push-in Fitting, straight

Thread G1: G1/4"-M

External hose diameter: 12 mm

Material: Brass

Surface: nickel plated

Ambient temperature: -20 ... 80 °C

STV-GE G1/4-AG 6

Part no.10.08.02.00205

Push-in Fitting, straight

Thread G1: G1/4"-M

External hose diameter: 6 mm

Material: Brass

Surface: nickel plated

Ambient temperature: -20 ... 80 °C

STV-GE G1/4-AG 8

Part no.10.08.02.00207

Push-in Fitting, straight

Thread G1: G1/4"-M

External hose diameter: 8 mm

Material: Brass

Surface: nickel plated

Ambient temperature: -20 ... 80 °C