Panasonic

NEW

Standard Type

Digital Fiber Sensor

FX-551 SERIES

CE Conforming to EMC Directive

Significantly improved stability and operation ease thanks to the industry's top* emission power and enhanced versatility!

* As of January 2016, survey by our company

Emission power
3 times higher than conventional models

Sensing range
1.6 times longer than conventional models

Entry model

Industry's No. 1!*

Three times higher emission power and 1.6 times longer sensing range than conventional models!

* As of January 2016, survey by our company

Ample sensing distance even with thin fiber

The sensing range of the thin reflective type fiber is about 1.6 times longer than that of a conventional product (the sensing range of the standard reflective type fiber is about 1.4 times longer). This adds extra flexibility to the sensor layout.

Fiber	Sensing range (STD mode)		Rate of increase in sensing range
	FX-551	FX-501	
FT-31	480 mm 18.898 in	315 mm 12.402 in	152 %
FT-42	1,470 mm 57.874 in	1,130 mm 44.488 in	130 %
FD-41	200 mm 7.874 in	125 mm 4.921 in	160 %
FD-61	620 mm 24.409 in	450 mm 17.717 in	138 %

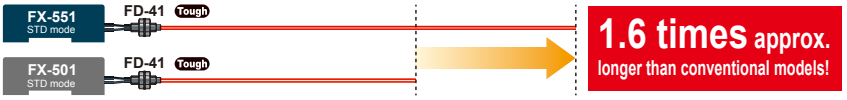

When the hysteresis is the same, the higher incident light intensity results in more stable detection.

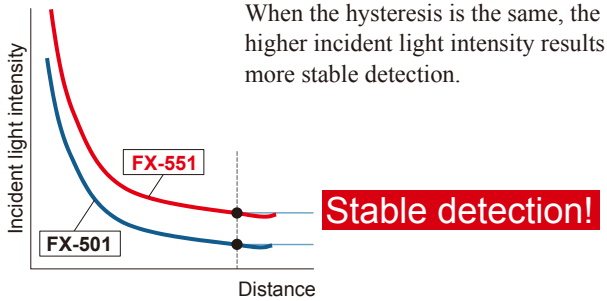

When the hysteresis is the same, the higher incident light intensity results in more stable detection.

Easy adjustment of beam axis

Thanks to the high emission power, a slight deviation of beam axis causes no problem. It is ideal for use in dusty areas* or for detection through an extremely small slit.

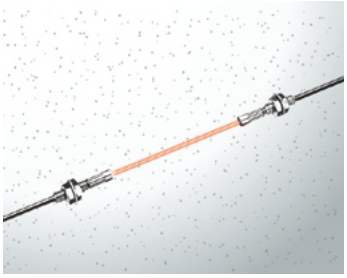

* Need to confirm proper operation in installed condition.

Equipped with a mode to minimize the effect of ambient light

When setting to activate the environment resistance mode in the emission frequency setting, the ambient illuminance for LED lights becomes about 2.5 times higher than that in the normal mode. This reduces erroneous detections caused by LED lights.

Simplified functions for improved operation ease

The **FX-500** series and newer models are equipped with only basic functions for improved ease of use. No matter which model you select, they are all easy to use.

MODE NAVI + Direct setting

MODE NAVI uses three indicators and a dual display to show the amplifier's basic operations. The current operation mode can be confirmed at a glance, so even a first-time user can easily operate the amplifier.

■NAVI display (lights off during RUN mode)

L/D
Switches output operation.
L: Light-ON D: Dark-ON

CUST
The sensitivity to received light can be changed directly.

PRO
Allows the selection of advanced functions such as timer, shift amount setting and threshold value tracking setting.

■Direct setting

Direct adjustment

Threshold value can be changed during RUN mode.

Direct teaching

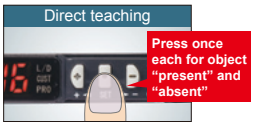

Teaching can be done during RUN mode.

No need to specify a main unit or sub unit

All **FX-500** amplifiers can be used as either a main unit or a sub unit. Just use a main cable or a sub cable to distinguish the two. This reduces the costs of inventory management.

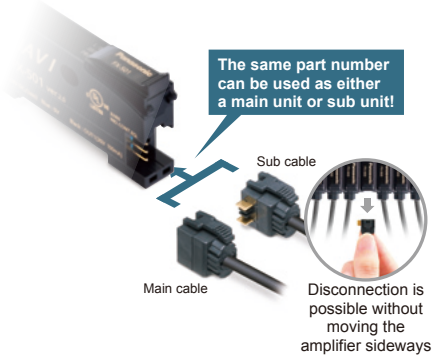

Wire-saving, space-saving

The quick-connection cables enable reduction in wiring. The connections and man-hours required for the relay terminal block setup can be reduced and valuable space is saved.

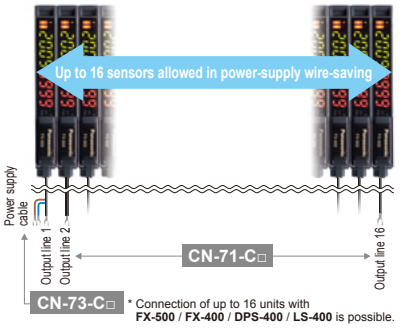

* Connection of up to 16 units with **FX-500** / **FX-400** / **DPS-400** / **LS-400** is possible.
* The optical communication function can not be used.

▶ List of functions in PRO mode

PRO 1	Response time setting, timer setting, shift amount setting
PRO 2	Teaching lock setting, digital display item setting, digital display turning setting, Eco setting
PRO 3	Display adjustment setting, reset setting, emission frequency setting, threshold value tracking setting

ORDER GUIDE

Amplifiers

Quick-connection cable is not supplied with **FX-551(P)**. Please order it separately.

Type	Appearance	Model No.	Emitting element	Output
Connector type		**FX-551**	Red LED	NPN open-collector transistor
		FX-551P		PNP open-collector transistor
Cable type		**FX-551-C2**		NPN open-collector transistor
		FX-551P-C2		PNP open-collector transistor

Quick-connection cables

Quick-connection cable is not supplied with the connector type amplifier. Please order it separately.

Type	Model No.	Description	
Main cable (3-core)	**CN-73-C1**	Length: 1 m 3.281 ft	0.2 mm² 3-core cabtyre cable, with connector on one end Cable outer diameter: ø3.3 mm ø0.130 in
	CN-73-C2	Length: 2 m 6.562 ft	
	CN-73-C5	Length: 5 m 16.404 ft	
Sub cable (1-core)	**CN-71-C1**	Length: 1 m 3.281 ft	0.2 mm² 1-core cabtyre cable, with connector on one end Cable outer diameter: ø3.3 mm ø0.130 in Connectable to a main cable up to 15 cables.
	CN-71-C2	Length: 2 m 6.562 ft	
	CN-71-C5	Length: 5 m 16.404 ft	

Main cable
- **CN-73-C□**

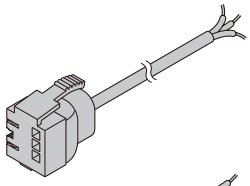

Sub cable
- **CN-71-C□**

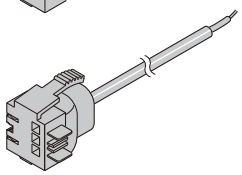

SPECIFICATIONS

Item \ Type	Connector type	Cable type
Model No. NPN output	**FX-551**	**FX-551-C2**
Model No. PNP output	**FX-551P**	**FX-551P-C2**
Supply voltage	12 to 24 V DC $^{+10}_{-15}$ % Ripple P-P 10 % or less	
Power consumption	Normal operation: 960 mW or less (current consumption 40 mA or less at 24 V supply voltage) ECO mode: 680 mW or less (current consumption 28 mA or less at 24 V supply voltage)	
Output	<NPN output type> NPN open-collector transistor • Maximum sink current: 100 mA • Applied voltage: 30 V DC or less (between output and 0 V) • Residual voltage: 2 V or less (Note 2) (at maximum sink current)	<PNP output type> PNP open-collector transistor • Maximum source current: 100 mA • Applied voltage: 30 V DC or less (between output and +V) • Residual voltage: 2 V or less (Note 2) (at maximum source current)
Output operation	Switchable either Light-ON or Dark-ON by L/D mode	
Short-circuit protection	Incorporated	
Response time	FAST: 60 µs or less, STD: 250 µs or less, LONG: 2 ms or less, U-LG: 4 ms or less, HYPR: 24 ms or less, selectable	
Sensitivity setting	2-point teaching / Limit teaching / Full-auto teaching / Manual adjustment	
Incident light sensitivity setting	Incorporated, 4 steps	
Incident light intensity display range	FAST / STD: 0 to 4,000, LONG: 0 to 8,000, U-LG / HYPR: 0 to 9,999	
Timer function	Incorporated with variable OFF-delay / ON-delay / One-shot / switchable either effective or ineffective	
Timer period	Timer range “ms”: 1 to 9,999 ms approx., 1 ms approx., Timer range “sec.”: 1 to 32 s approx., 1 s approx., Timer range “1/10 ms”: 0.1 to 999.9 ms approx., 0.1 ms approx. (Note 3)	
Different frequency interference prevention function (Note 4)	Incorporated (up to 4 units). Note that the response time varies depending on the setting. F-1: 0.8 ms or less, F-2: 0.9 ms or less, F-3: 1.0 ms or less, F-4: 1.7 ms or less	
Protection	IP40 (IEC)	
Ambient temperature	-10 to +55 °C +14 to +131 °F (If 4 to 7 units are mounted in cascade: -10 to +50 °C +14 to +122 °F or if 8 to 16 units are mounted in cascade: -10 to +45 °C +14 to +113 °F) (No dew condensation or icing allowed), Storage: -20 to +70 °C -4 to +158 °F	
Emitting element (modulated)	Red LED (Peak emission wavelength: 660 nm 0.026 mil)	
Material	Enclosure, Case cover: Polycarbonate, Switch: Polyacetal	
Cable	——	0.2 mm² 3-core cabtyre cable, 2 m 6.562 ft long
Cable extension	——	Extension up to total 100 m 328.084 ft is possible with 0.3 mm², or more, cable. (however, supply voltage 12 V DC or more)
Weight	Net weight: 15 g approx., Gross weight: 55 g approx.	Net weight: 55 g approx., Gross weight: 90 g approx.

Notes: 1) Where measurement conditions have not been specified precisely, the conditions used were an ambient temperature of +23 °C +73.4 °F.
2) In case of using the quick-connection cable (cable length 5 m 16.404 ft) (optional).
3) When set to LONG, U-LG, HYPR, IP-F or IP-R, the time range cannot be set to 1/10 ms.
4) This function increases the hysteresis. Check the sensing condition when using the function.

LIST OF FIBERS

Tough : Refer to a fiber which possesses both unbreakable (bending radius: R10 mm R0.394 in, reciprocating bending: 180°) and more flexible (bending radius: R4 mm R0.157 in or less) features.

Bending durability : Refer to a fiber which possesses unbreakable bending resistant feature (bending radius: R10 mm R0.394 in, reciprocating bending: 180°).

Type			Shape of fiber head (mm)	Model No.	Bending radius (mm)	Fiber cable length ✂: Free-cut	Sensing range (mm in) (Note) STD HYPR	Sensing range (mm in) (Note) U-LG LONG FAST	Beam axis dia. (mm)	Beam axis position / Inclination of beam axis	Protection	Ambient temp.
Thru-beam	Threaded	M3	M3 12	Tough Bending durability FT-31	R2	2 m	STD 480 18.898 HYPR 1,580 62.205	1,000 700 290	ø0.5	150 µm / ±2°	IP67	−55 to +80 °C
		M4	Lens mountable M4 15	Tough Bending durability FT-42	R4		STD 1,470 57.874 HYPR 3,600 141.732	2,900 2,100 890	ø1			
	Square head	M3	M3 W5.5 × H8 × D16	Tough Bending durability FT-R31	R2		STD 510 20.079 HYPR 1,670 65.748	1,120 700 310	ø0.5	—		
		M4	Lens mountable M4 W7 × H9 × D13.5	Tough Bending durability FT-R43	R4		STD 1,250 49.213 HYPR 3,600 141.732	2,650 1,750 750	ø1			
Reflective	Threaded	M3	M3 12	Tough Bending durability FD-31	R2	2 m	STD 200 7.874 HYPR 750 29.528	450 310 140	—	150 µm / ±3°	IP67	
		M4	M4 14	Tough Bending durability FD-41	R2		STD 200 7.874 HYPR 750 29.528	450 310 140				
		M6	M6 17	Tough Bending durability FD-61	R4		STD 620 24.409 HYPR 1,630 64.173	1,180 870 380				
		M3	Coaxial, Lens mountable M3 17	Tough Bending durability FD-32G	R2		STD 320 12.598 HYPR 1,150 45.276	730 420 170		—	IP40	
		M4	Coaxial, Lens mountable M4 25	Tough Bending durability FD-42G	R2		STD 320 12.598 HYPR 1,150 45.276	730 420 170				

Note: Note that the sensing range of the free-cut type fiber may be reduced by 20 % max. depending upon how the fiber is cut.

DIMENSIONS (Unit: mm in)

Refer to "Fiber Sensor Guide Book" or our website for the dimensions of the quick-connection cable, mounting bracket, end plate and fiber. The CAD data can be downloaded from our website.

FX-551(P) — Amplifier

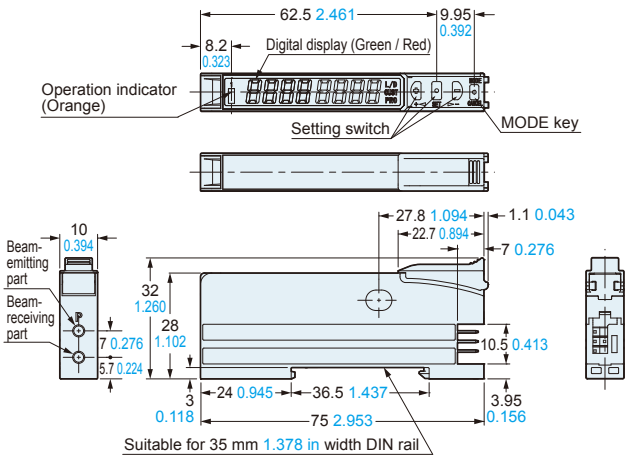

FX-551(P)-C2 — Amplifier

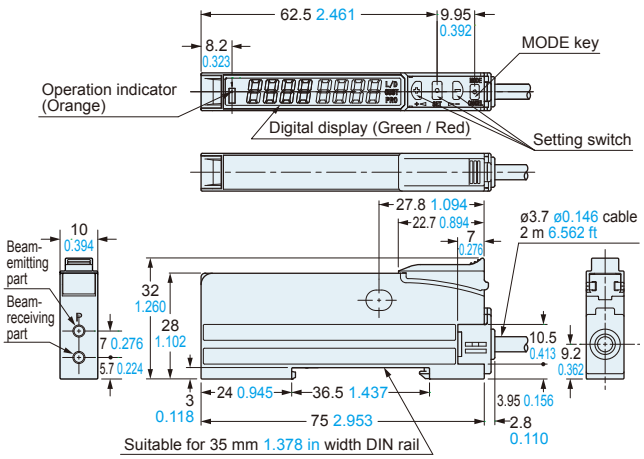

Fiber Sensor Conditional Search

http://search-ac.va.panasonic.co.jp/e/spec/fiber/

You can find the fibers that suit your purpose from various conditions, such as fiber types, sensing ranges and applications and choose the optimum fiber.

* Sensing range is the value based on a combination of **FX-500** series.

Fiber Sensor Guide Book

Fiber Sensor Guide Book is available. Sensing ranges for **FX-500** / **FX-100** series, sensing characteristics, options and dimensional outline drawing are contained in this book.

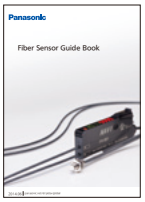

Panasonic Industrial Devices SUNX Co., Ltd.
Global Sales Department
2431-1 Ushiyama-cho, Kasugai-shi, Aichi, 486-0901, Japan
■Telephone: +81-568-33-7861 ■Facsimile: +81-568-33-8591

No. CE-FX551-10 February, 2016