FIBOX
Enclosing innovations

EK EKJB 130 G

Sample photo

Order symbol:	EKJB 130 G	**EAN**:	6418074013484
Product nbr:	2538013	**El. number**:	
Description:	Enclosure, PC	Finland:	3425406
Remarks:	Grey cover	Electric No. Italy:	7501020
		Electric No. Sweden:	2538013

Including: Flanged Base with screws for mounting plate/DIN-rail, cover with PUR gasket and polyamide cover screws.

Dimensions:	Length	Width	Height
mm:	280	190	130
inch:	11.0	7.5	5.1

Materials:

Material:	Polycarbonate
Base colour:	RAL 7035 -light grey
Cover screws material:	Polyamide
Cover colour:	RAL 7035 -light grey
Cover screws colour:	Grey
Gasket material:	Polyurethane

Temperatures:

Temperature °C (short term):	-40 … 120 °C
Temperature °C (continuous):	-40 … 80 °C
Temperature °F (short term):	-40 … 250 °F
Temperature °F (continuous):	-40 … 175 °F

Accessories:

EKJB	Base, PC

Accessories:

EKJ 30-G	Cover
EKJ 80-G	Cover
EKJ 30-T	Cover
EKJ 80-T	Cover
EKJVT	Mounting plate
EKJXT	Mounting plate isolated
EKV 12	DIN-35 Mounting rail
EKV 22	DIN-35 Mounting rail
EKJZR	Extension frame

Rating:

Ingress Protection (EN 60529): IP66/IP67
Impact Resistance (EN 62262): IK08
Electrical insulation: Totally insulated
Halogen free (DIN/VDE 0472, Part 815): 1
UV resistance: UL 508
Flammability Rating: UL 746C 5V
Glow Wire Test (IEC 695-2-1) °C: 960
NEMA Class: NEMA 1, 3, 3S, 4, 4X, 6, 6P, 12

Certificates:

Germanischer Lloyd (GL)
SGS Fimko
Lloyds Register of Shipping (LR)
Gost R

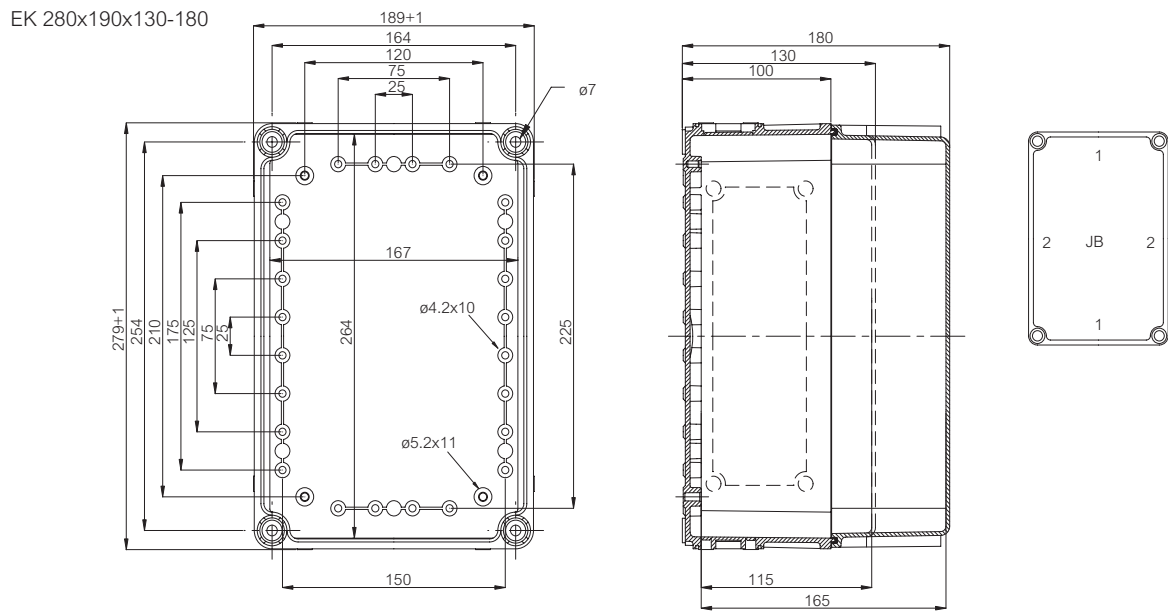

© Fibox Oy, Data subject to change without notice (printed: 20.4.2016)