EDITION	DATE	REVISION RECORD	REVISION NO.	APPROVED

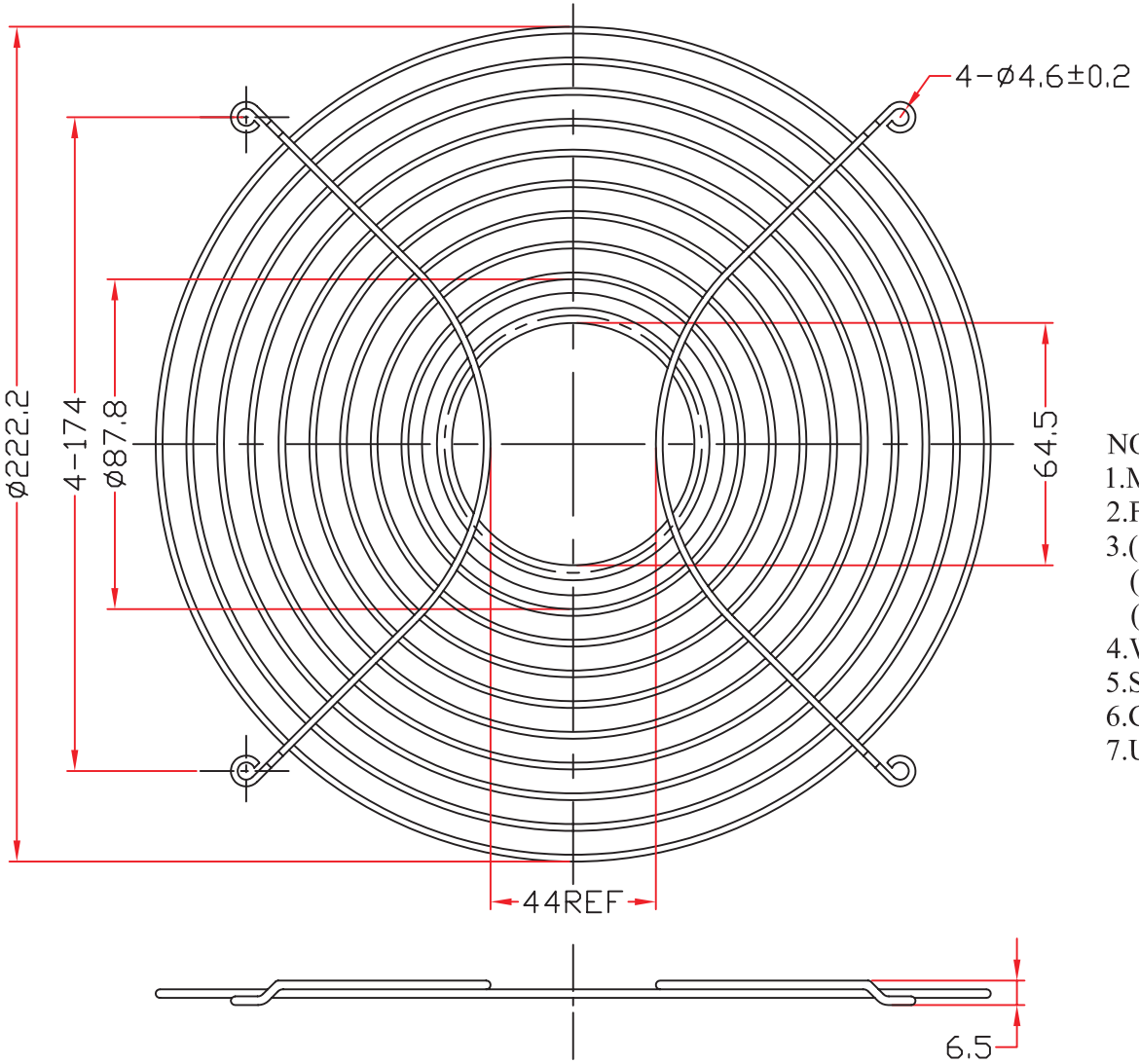

NOTES:
1.MATERIAL:C1008 BRIGHT BASIC WIRE.
2.FINISH:BRIGHT NICKEL CHROME.$Cr3^{+}$
3.(1)RINGS ARE ø2.3± 0.05mm.
(2)RIBS ARE ø2.3± 0.05mm.
(3)DISC t=0.8mm.
4.WELD JOINTS TO WITHSTAND 88 LBS PULL FORCE.
5.SPACING BETWEEN RINGS TO BE EUQIDISTANT 5.81mm.
6.GENERAL TOLERANCE UNLESS NOTED:±0.5mm.
7.UNIT:mm.

APPROVED	CHECKED	DESIGNED	DRAWN		MATERIAL	SEE NOTES	TITLE	FAN GUARD
				SCALE 1/1	FINISH	SEE NOTES	PART NO.	0 REV
				DRAWING DATE				