FOR 客户名称	APPROVED 客户确认签字	ATTN 销售负责人

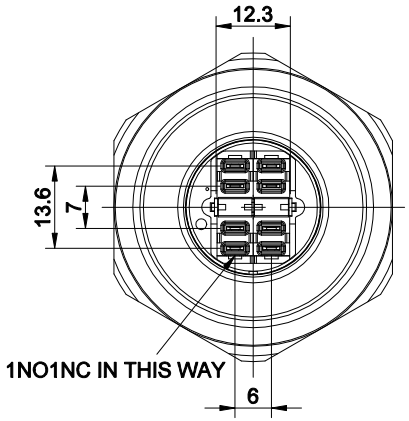

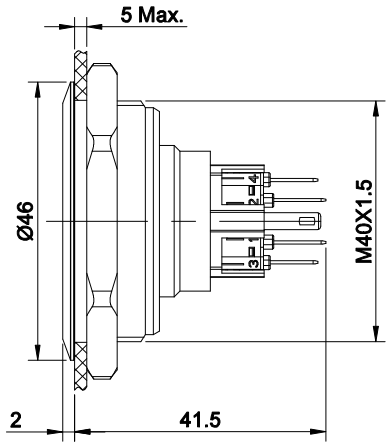

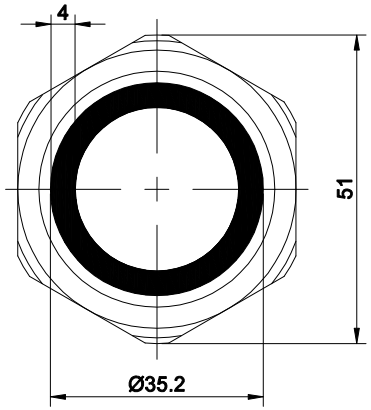

THE SHADED PART IS ILLUMINATED

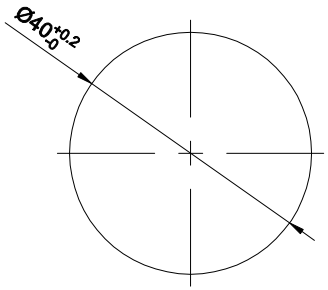

PANEL CUTOUT

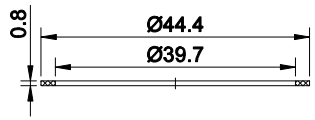

SEAL RING

SCHEMATIC

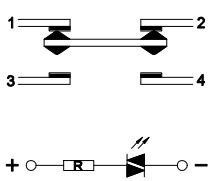

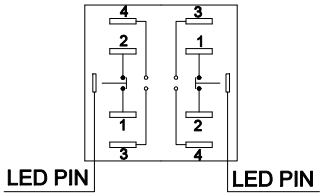

CONTACT COMPOSITION

1、2、3、4ARE ONE SET;
1,2 ARE NORMAL CLOSED(NC);
3,4 ARE NORMAL OPENED(NO).

PART NUMBER: GQ40-□■E/△/▲/S

"□"	CONTACT STRUCTURE
11	1NO1NC
22	2NO2NC

"■"	OPERATION MODE
NO LETTER	MOMENTARY
Z	LATCHING

"△"	LAMP COLOR
R	RED
G	GREEN
Y	YELLOW
B	BLUE
W	WHITE

"▲"	LAMP VOLTAGE
6V	AC/DC 6V
12V	AC/DC 12V
24V	AC/DC 24V
110V	AC/DC 110V
220V	AC/DC 220V
OTHER VOLTAGE CAN BE MADE TO ORDER	

SPECIFICATIONS:
1.SWITCH RATING: Ui:250V, Ith:5A.
2.SWITCH OPERATION: MOMENTARY/LATCHING.
3.MECHANICAL LIFE: ≥1,000,000 cycles(MOMENTARY),
≥500,000 cycles(LATCHING).
4.ELECTRICAL LIFE: ≥50,000 cycles.
5.CONTACT RESISTANCE: ≤50mΩ.
6.INSULATION RESISTANCE: ≥1000MΩ(500VDC).
7.POWER-FREQUENCY WITHSTAND VOLTAGE: 1,500V, RMS 50Hz, 1min.
8.OPERATING TEMPERATURE: -25˚C～ +55˚C(NO FREEZING, KEEP THE AIR FLOWING AROUND PUSHBUTTON).
9.OPERATING FORCE: ABOUT 4N(1NO1NC), ABOUT 7.5N(2NO2NC).
10.OPERATING TRAVEL: ABOUT 2.5mm.
11.TORQUE: ABOUT 1.2N·m APPLIED TO NUT.
12.FRONT PANEL PROTECTION DEGREE: IP65; IK10.
13.TERMINAL TYPE: PIN TERMINAL(2.8X0.5mm).
14.GENERAL TOLERANCE:0-18mm=±0.25, 18-80mm=±0.52.
15.COMPLIANT WITH RoHS

MATERIALS:
1.CONTACT: SILVER ALLOY.
2.BUTTON: STAINLESS STEEL/PC.
3.BODY: STAINLESS STEEL.
4.BASE: PA.

BRAND 品牌	红波按钮制造有限公司 ONPOW PUSH BUTTON MANUFACTURE CO.,LTD.				
ONPOW 欧宝龙®					
TITLE 名称	GQ SERIES ANTI-VANDAL PUSH BUTTON			UNIT 单位	mm
DWG NO. 图号	GQ40-E		SCALE 比例 0.8 : 1	SIZE 图纸	A4
FILE NAME 档案名称	GQ40.DWG	DRAWN 制图 CXX 2025/03/10	SHEET 张 1/1	REV. 版本	V1.0