FOR 客户名称	APPROVED 客户确认签字	ATTN 销售负责人

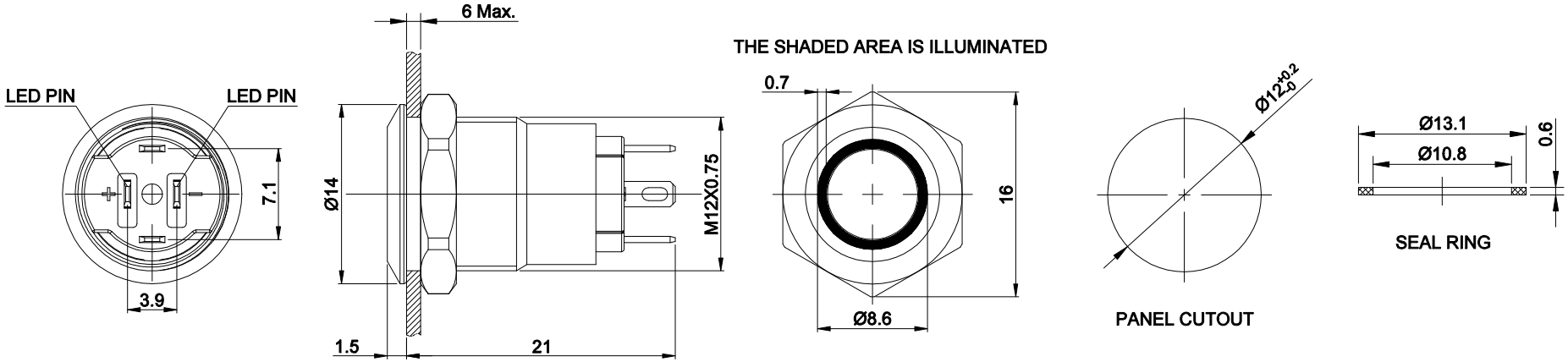

PART NUMBER:ONPOW6312F-10■E/J/△/▲/◎/※

"■"	OPERATION MODE
NO LETTER	MOMENTARY
Z	LATCHING

"▲"	LAMP VOLTAGE
6V	AC/DC 6V
12V	AC/DC 12V
24V	AC/DC 24V
OTHER VOLTAGE CAN BE MADE TO ORDER	

"◎"	CRUST MATERIAL
S	STAINLESS STEEL
A	AL ALLOY(BLACK)

"△"	LAMP COLOR
R	RED
G	GREEN
Y	YELLOW
B	BLUE
W	WHITE

"※"	PROTECTION DEGREE
NO LETTER	IP65
FP	IP67(CUSTOMIZED)

SCHEMATIC

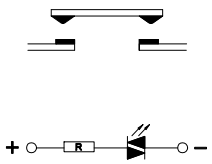

DOUBLE-BREAKPOINT SLOW-ACTING CONTACT SWITCH WITH TWO TERMINALS

SPECIFICATIONS:
1.SWITCH RATING: DC36V/2A.
2.LAMP CIRCUIT: USING AC/DC LED LAMP,THE TERMINALS NO DIFFERENCE OF ANODE AND CATHODE.
3.MECHANICAL LIFE: ≥1,000,000 cycles(MOMENTARY), ≥500,000 cycles(LATCHING).
4.ELECTRICAL LIFE: ≥50,000 cycles.
5.INITIAL CONTACT RESISTANCE: ≤50mΩ.
6.INSULATION RESISTANCE: ≥1000MΩ(500VDC).
7.POWER-FREQUENCY WITHSTAND VOLTAGE: 1,500V, RMS 50Hz, 1min.
8.OPERATING TEMPERATURE: -25˚C～ +55˚C(NO FREEZING, KEEP THE AIR FLOWING AROUND PUSHBUTTON).
9.TORQUE: ABOUT 0.3N·m APPLIED TO NUT.
10.OPERATING FORCE: ABOUT 2.5N.
11.OPERATING TRAVEL: ABOUT 2.4mm.
12.FRONT PANEL PROTECTION DEGREE: IP65(IP67 CAN BE CUSTOMIZED); IK07.
13.TERMINAL TYPE: PIN TERMINAL(2X0.5mm).
14.GENERAL TOLERANCE:0-18mm=±0.25, 18-80mm=±0.52.
15.RoHS CAN BE CUSTOMIZED.

MATERIALS:
1.CONTACT: SILVER ALLOY.
2.BUTTON: ◎/PC.
3.BODY: ◎.
4.BASE: PA.

BRAND 品牌	红波按钮制造有限公司 ONPOW PUSH BUTTON MANUFACTURE CO.,LTD.				
ONPOW 欧宝龙®					
TITLE 名称	ONPOW63 SERIES ANTI-VANDAL PUSH BUTTON			UNIT 单位	mm
DWG NO. 图号	ONPOW6312F-10E(带灯)		SCALE 比例	2 : 1	SIZE 图纸 A4
FILE NAME 档案名称	ONPOW6312F-10E .DWG	DRAWN 制图 LJJ 2025/07/05	SHEET 张	1/1	REV. 版本 V1.0