FOR 客户名称	APPROVED 客户确认签字	ATTN 销售负责人

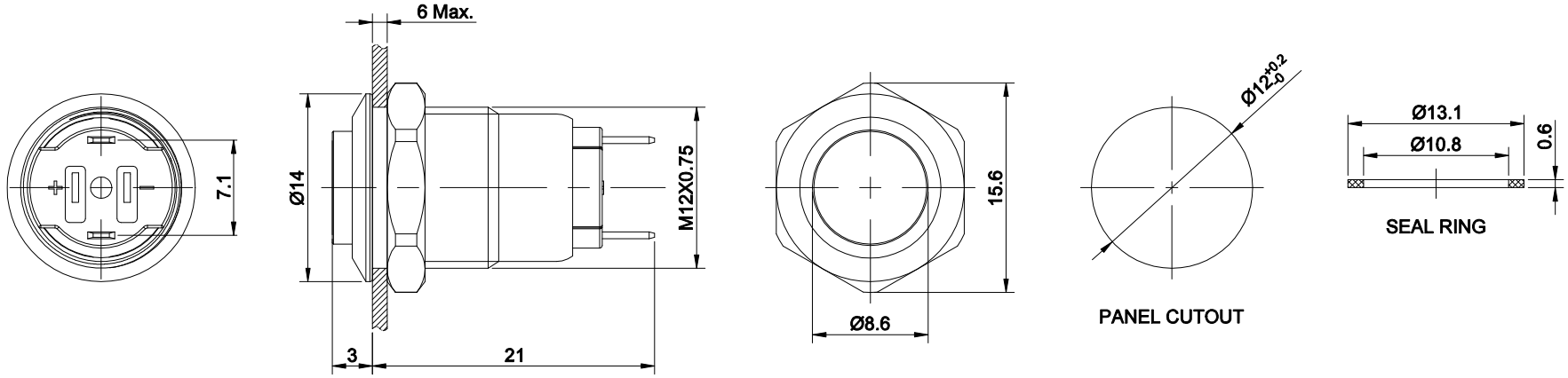

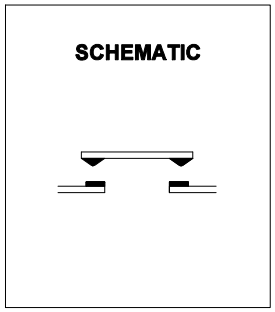

DOUBLE-BREAKPOINT SLOW-ACTING CONTACT SWITCH WITH TWO TERMINALS

PART NUMBER:ONPOW6312H-10■/J/※

"■"	OPERATION MODE	"※"	PROTECTION DEGREE
NO LETTER	MOMENTARY	NO LETTER	IP65
Z	LATCHING	FP	IP67(CUSTOMIZED)

SPECIFICATIONS:
1.SWITCH RATING: DC36V/2A.
2.MECHANICAL LIFE: ≥1,000,000 cycles(MOMENTARY),
≥500,000 cycles(LATCHING).
3.ELECTRICAL LIFE: ≥50,000 cycles.
4.INITIAL CONTACT RESISTANCE: ≤50mΩ.
5.INSULATION RESISTANCE: ≥1000MΩ(500VDC).
6.POWER-FREQUENCY WITHSTAND VOLTAGE: 1,500V, RMS 50Hz, 1min.
7.OPERATING TEMPERATURE: -25˚C～ +55˚C(NO FREEZING, KEEP THE AIR FLOWING AROUND PUSHBUTTON).
8.TORQUE: ABOUT 0.3N·m APPLIED TO NUT.
9.OPERATING FORCE: ABOUT 2.5N.
10.OPERATING TRAVEL: ABOUT 2.4mm.
11.FRONT PANEL PROTECTION DEGREE: IP65(IP67 CAN BE CUSTOMIZED); IK07.
12.TERMINAL TYPE: PIN TERMINAL(2X0.5mm).
13.GENERAL TOLERANCE:0-18mm=±0.25, 18-80mm=±0.52.
14.RoHS CAN BE CUSTOMIZED..

MATERIALS:
1.CONTACT: SILVER ALLOY.
2.BUTTON: STAINLESS STEEL.
3.BODY: STAINLESS STEEL.
4.BASE: PA.

BRAND 品牌 ONPOW 欧宝龙®	红波按钮制造有限公司 ONPOW PUSH BUTTON MANUFACTURE CO.,LTD.				
TITLE 名称	ONPOW63 SERIES ANTI-VANDAL PUSH BUTTON			UNIT 单位	mm
DWG NO. 图号	ONPOW6312H-10(不带灯)		SCALE 比例 2 : 1	SIZE 图纸	A4
FILE NAME 档案名称	ONPOW6312H-10 .DWG	DRAWN 制图 LJJ 2025/06/24	SHEET 张 1/1	REV. 版本	V1.0