© 2023 TE Connectivity. All Rights Reserved.

REVISIONS					
P	LTR	DESCRIPTION	DATE	DWN	APVD
	A	INITIAL REVISION	05MAY2023	NG	RM
	B	ADDED MARKING	18JUL2023	IS	RM

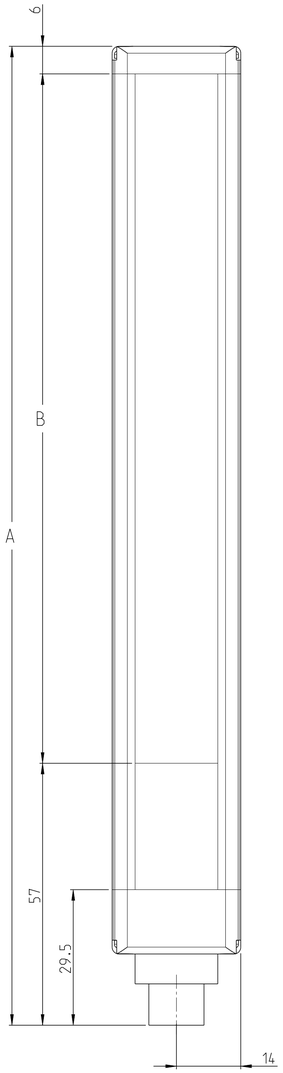

SECTION A-A

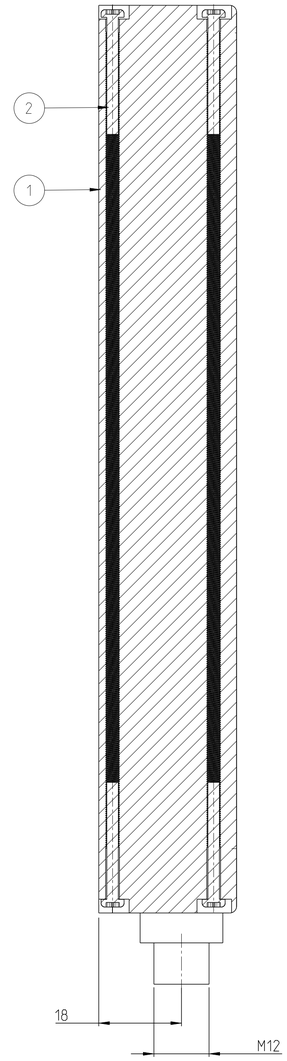

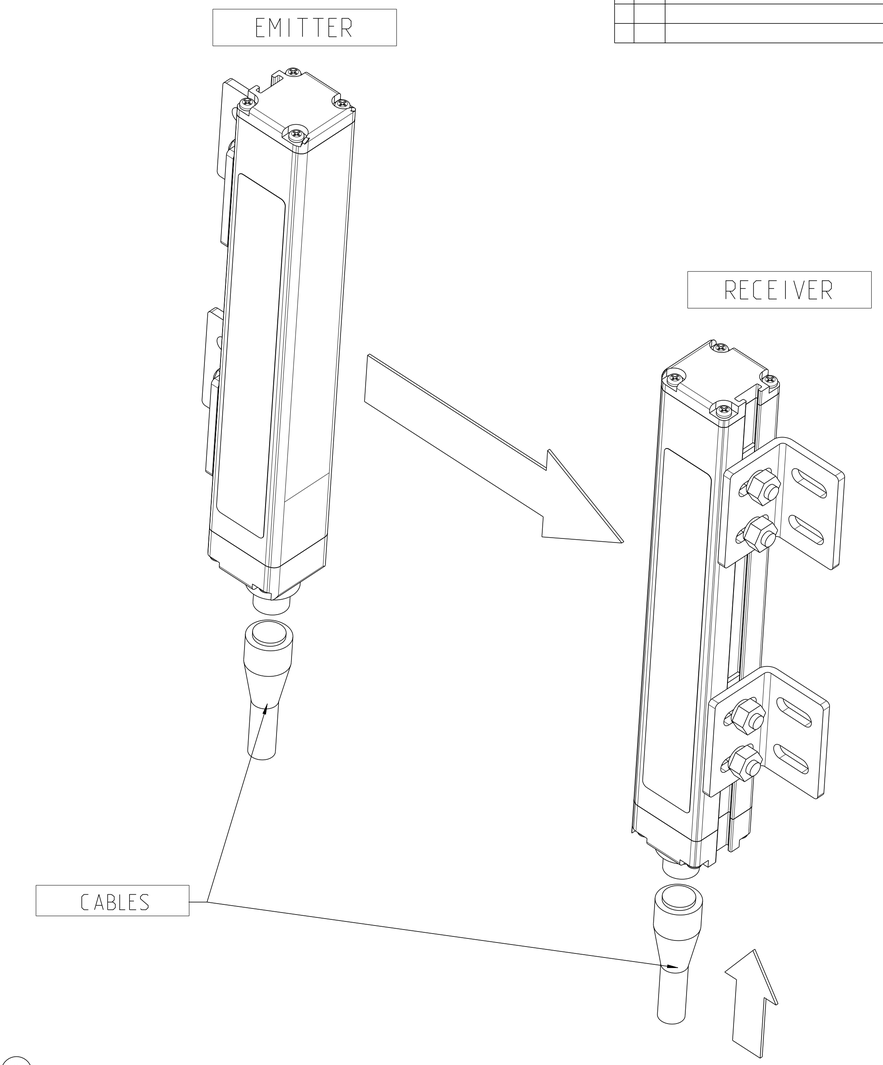

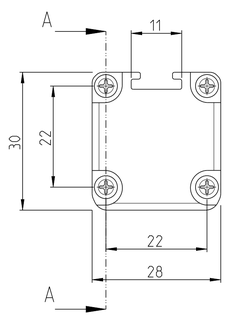

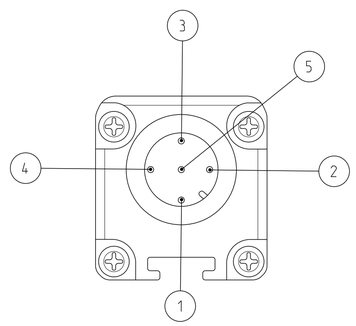

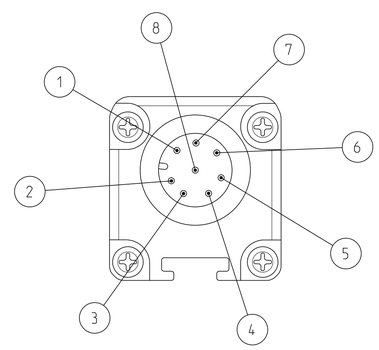

EMITTER CONNECTIONS			
PIN	COLOR	SIGNAL	DESCRIPTION
1	Brown	24VDC	24VDC power supply
2	White	RANGE0	Light curtain configuration complying EN61131-2
3	Blue	0VDC	0VDC power supply
4	Black	RANGE1	Light curtain configuration complying EN61131-2
5	Grey	PE	Ground connection

RECEIVER CONNECTIONS					
PIN	COLOR	SIGNAL	TYPE	DESCRIPTION	OPERATION
1	White	OSSD1	Output	Static safety output 1	PNP active high
2	Brown	24VDC	-	24VDC power supply	-
3	Green	OSSD2	Output	Static safety output 2	PNP active high
4	Yellow	K1_K2/RESTART	Input	Fbk from ext. contact.	Complying with the EN61131-2 standar
5	Grey	SEL_A	Input	Light curtain configuration	
6	Pink	SEL_B	Input		
7	Blue	0VDC	-	0VDC power supply	-
8	Red	PE	-	Ground connection	-

SL.NO	QTY	DOC TITLE	DRAWING NUMBER	MATERIAL	COMMENTS
2	8	M2.5 Screw	-	-	-
1	1	Body	-	-	-

THIS DRAWING IS A CONTROLLED DOCUMENT.

DIMENSIONS: mm

TOLERANCES UNLESS OTHERWISE SPECIFIED:
0 PLC ± -
1 PLC ± 1
2 PLC ± 1
3 PLC ± 1
4 PLC ± 1
ANGLES ± -

MATERIAL -
FINISH -
-
-

DWN Irfan S 21APR1L2023
CHK Vishal G 21APR1L2023
APVD Rafeeq. Mohd 21APR1L2023

PRODUCT SPEC SLC4-F14-016
APPLICATION SPEC -
WEIGHT REF.TABLE

TE Connectivity

NAME SLC4-F14-016
-
-

SIZE A1 | CAGE CODE 00779 | DRAWING NO © 1SNP300560-0100 | RESTRICTED TO -

CUSTOMER DRAWING | SCALE 3:2 | SHEET 1 OF 5 | REV B2

4805 (3/13)

© 2023 TE Connectivity. All Rights Reserved.

REVISIONS

P	LTR	DESCRIPTION	DATE	DWN	APVD
	A	INITIAL REVISION	05MAY2023	NG	RM
	B	ADDED MARKING	18JUL2023	IS	RM

SL.NO	TCPN ($PN)	TE_Type ($TYPE)	A (mm)	B (mm)	Safety level	Protected height (mm) ($DHPH)	CO	Resolution (mm)	Max. Range(m)	Net weight(g)	$WR	$DC	$RT	$WT	$NB	$LP	$PT	$PC	$PN	Models	$CL1	$CL2
1	2437979-1	SLC4-F14-016	213	150	Type 4-PLe	160	RESOLUTION	14	6	589	0±3 / 1±6 m	≥ Ø 14 mm	≤ 4 ms	-20±55 °C	-	-	EMITTER/RECEIVER	1W/2W	2437979-1/2437979-1	15x	TYPE 4	TYPE 4 - SIL 3 - PL e
2	2437979-2	SLC4-F14-026	313	250	Type 4-PLe	260	RESOLUTION	14	6	789	0±3 / 1±6 m	≥ Ø 14 mm	≤ 5 ms	-20±55 °C	-	-	EMITTER/RECEIVER	1W/2W	2437979-2/2437979-2	25x	TYPE 4	TYPE 4 - SIL 3 - PL e
3	2437979-3	SLC4-F14-031	363	300	Type 4-PLe	310	RESOLUTION	14	6	849	0±3 / 1±6 m	≥ Ø 14 mm	≤ 5.5 ms	-20±55 °C	-	-	EMITTER/RECEIVER	1W/2W	2437979-3/2437979-3	30x	TYPE 4	TYPE 4 - SIL 3 - PL e
4	2437979-4	SLC4-F14-046	513	450	Type 4-PLe	460	RESOLUTION	14	6	1119	0±3 / 1±6 m	≥ Ø 14 mm	≤ 7.5 ms	-20±55 °C	-	-	EMITTER/RECEIVER	1W/2W	2437979-4/2437979-4	45x	TYPE 4	TYPE 4 - SIL 3 - PL e
5	2437979-6	SLC4-F14-061	663	600	Type 4-PLe	610	RESOLUTION	14	6	1409	0±3 / 1±6 m	≥ Ø 14 mm	≤ 9 ms	-20±55 °C	-	-	EMITTER/RECEIVER	1W/2W	2437979-6/2437979-6	60x	TYPE 4	TYPE 4 - SIL 3 - PL e
6	2437979-7	SLC4-F14-076	813	750	Type 4-PLe	760	RESOLUTION	14	6	1649	0±3 / 1±6 m	≥ Ø 14 mm	≤ 11 ms	-20±55 °C	-	-	EMITTER/RECEIVER	1W/2W	2437979-7/2437979-7	75x	TYPE 4	TYPE 4 - SIL 3 - PL e
7	2437979-9	SLC4-F14-091	963	900	Type 4-PLe	910	RESOLUTION	14	6	1889	0±3 / 1±6 m	≥ Ø 14 mm	≤ 13 ms	-20±55 °C	-	-	EMITTER/RECEIVER	1W/2W	2437979-9/2437979-9	90x	TYPE 4	TYPE 4 - SIL 3 - PL e
8	1-2437979-0	SLC4-F14-106	1113	1050	Type 4-PLe	1060	RESOLUTION	14	6	2189	0±3 / 1±6 m	≥ Ø 14 mm	≤ 14.5 ms	-20±55 °C	-	-	EMITTER/RECEIVER	1W/2W	1-2437979-0/1-2437979-0	105x	TYPE 4	TYPE 4 - SIL 3 - PL e
9	1-2437979-2	SLC4-F14-121	1263	1200	Type 4-PLe	1210	RESOLUTION	14	6	2509	0±3 / 1±6 m	≥ Ø 14 mm	≤ 16.5 ms	-20±55 °C	-	-	EMITTER/RECEIVER	1W/2W	1-2437979-2/1-2437979-2	120x	TYPE 4	TYPE 4 - SIL 3 - PL e
10	1-2437979-3	SLC4-F14-136	1413	1350	Type 4-PLe	1360	RESOLUTION	14	6	2789	0±3 / 1±6 m	≥ Ø 14 mm	≤ 18 ms	-20±55 °C	-	-	EMITTER/RECEIVER	1W/2W	1-2437979-3/1-2437979-3	135x	TYPE 4	TYPE 4 - SIL 3 - PL e
11	1-2437979-5	SLC4-F14-151	1563	1500	Type 4-PLe	1510	RESOLUTION	14	6	3069	0±3 / 1±6 m	≥ Ø 14 mm	≤ 20 ms	-20±55 °C	-	-	EMITTER/RECEIVER	1W/2W	1-2437979-5/1-2437979-5	150x	TYPE 4	TYPE 4 - SIL 3 - PL e
12	1-2437979-6	SLC4-F14-166	1713	1650	Type 4-PLe	1660	RESOLUTION	14	6	3349	0±3 / 1±6 m	≥ Ø 14 mm	≤ 22 ms	-20±55 °C	-	-	EMITTER/RECEIVER	1W/2W	1-2437979-6/1-2437979-6	165x	TYPE 4	TYPE 4 - SIL 3 - PL e
13	1-2437979-8	SLC4-F14-181	1863	1800	Type 4-PLe	1810	RESOLUTION	14	6	3569	0±3 / 1±6 m	≥ Ø 14 mm	≤ 23.5 ms	-20±55 °C	-	-	EMITTER/RECEIVER	1W/2W	1-2437979-8/1-2437979-8	180x	TYPE 4	TYPE 4 - SIL 3 - PL e
14	1-2437979-9	SLC4-F14-196	2013	1950	Type 4-PLe	1960	RESOLUTION	14	6	3829	0±3 / 1±6 m	≥ Ø 14 mm	≤ 25 ms	-20±55 °C	-	-	EMITTER/RECEIVER	1W/2W	1-2437979-9/1-2437979-9	195x	TYPE 4	TYPE 4 - SIL 3 - PL e
15	2446038-1	SLC4-H30-016	213	150	Type 4-PLe	160	RESOLUTION	30	12	589	0±4 / 0±12 m	≥ Ø 30 mm	≤ 4 ms	-30±55 °C	-	-	EMITTER/RECEIVER	1W/2W	2446038-1/2446038-1	15x	TYPE 4	TYPE 4 - SIL 3 - PL e
16	2446038-2	SLC4-H30-026	313	250	Type 4-PLe	260	RESOLUTION	30	12	789	0±4 / 0±12 m	≥ Ø 30 mm	≤ 5 ms	-30±55 °C	-	-	EMITTER/RECEIVER	1W/2W	2446038-2/2446038-2	25x	TYPE 4	TYPE 4 - SIL 3 - PL e
17	2446038-3	SLC4-H30-031	363	300	Type 4-PLe	310	RESOLUTION	30	12	849	0±4 / 0±12 m	≥ Ø 30 mm	≤ 5.5 ms	-30±55 °C	-	-	EMITTER/RECEIVER	1W/2W	2446038-3/2446038-3	30x	TYPE 4	TYPE 4 - SIL 3 - PL e
18	2446038-4	SLC4-H30-046	513	450	Type 4-PLe	460	RESOLUTION	30	12	1119	0±4 / 0±12 m	≥ Ø 30 mm	≤ 7.5 ms	-30±55 °C	-	-	EMITTER/RECEIVER	1W/2W	2446038-4/2446038-4	45x	TYPE 4	TYPE 4 - SIL 3 - PL e
19	2446038-6	SLC4-H30-061	663	600	Type 4-PLe	610	RESOLUTION	30	12	1409	0±4 / 0±12 m	≥ Ø 30 mm	≤ 9 ms	-30±55 °C	-	-	EMITTER/RECEIVER	1W/2W	2446038-6/2446038-6	60x	TYPE 4	TYPE 4 - SIL 3 - PL e
20	2446038-7	SLC4-H30-076	813	750	Type 4-PLe	760	RESOLUTION	30	12	1649	0±4 / 0±12 m	≥ Ø 30 mm	≤ 10.5	-30±55 °C	-	-	EMITTER/RECEIVER	1W/2W	2446038-7/2446038-7	75x	TYPE 4	TYPE 4 - SIL 3 - PL e
21	2446038-9	SLC4-H30-091	963	900	Type 4-PLe	910	RESOLUTION	30	12	1889	0±4 / 0±12 m	≥ Ø 30 mm	≤ 12.5	-30±55 °C	-	-	EMITTER/RECEIVER	1W/2W	2446038-9/2446038-9	90x	TYPE 4	TYPE 4 - SIL 3 - PL e
22	1-2446038-0	SLC4-H30-106	1113	1050	Type 4-PLe	1060	RESOLUTION	30	12	2189	0±4 / 0±12 m	≥ Ø 30 mm	≤ 14	-30±55 °C	-	-	EMITTER/RECEIVER	1W/2W	1-2446038-0/1-2446038-0	105x	TYPE 4	TYPE 4 - SIL 3 - PL e
23	1-2446038-2	SLC4-H30-121	1263	1200	Type 4-PLe	1210	RESOLUTION	30	12	2509	0±4 / 0±12 m	≥ Ø 30 mm	≤ 15.5	-30±55 °C	-	-	EMITTER/RECEIVER	1W/2W	1-2446038-2/1-2446038-2	120x	TYPE 4	TYPE 4 - SIL 3 - PL e
24	1-2446038-3	SLC4-H30-136	1413	1350	Type 4-PLe	1360	RESOLUTION	30	12	2789	0±4 / 0±12 m	≥ Ø 30 mm	≤ 17	-30±55 °C	-	-	EMITTER/RECEIVER	1W/2W	1-2446038-3/1-2446038-3	135x	TYPE 4	TYPE 4 - SIL 3 - PL e
25	1-2446038-5	SLC4-H30-151	1563	1500	Type 4-PLe	1510	RESOLUTION	30	12	3069	0±4 / 0±12 m	≥ Ø 30 mm	≤ 19	-30±55 °C	-	-	EMITTER/RECEIVER	1W/2W	1-2446038-5/1-2446038-5	150x	TYPE 4	TYPE 4 - SIL 3 - PL e
26	1-2446038-6	SLC4-H30-166	1713	1650	Type 4-PLe	1660	RESOLUTION	30	12	3349	0±4 / 0±12 m	≥ Ø 30 mm	≤ 20.5	-30±55 °C	-	-	EMITTER/RECEIVER	1W/2W	1-2446038-6/1-2446038-6	165x	TYPE 4	TYPE 4 - SIL 3 - PL e
27	1-2446038-8	SLC4-H30-181	1863	1800	Type 4-PLe	1810	RESOLUTION	30	12	3569	0±4 / 0±12 m	≥ Ø 30 mm	≤ 22	-30±55 °C	-	-	EMITTER/RECEIVER	1W/2W	1-2446038-8/1-2446038-8	180x	TYPE 4	TYPE 4 - SIL 3 - PL e
28	1-2446038-9	SLC4-H30-196	2013	1950	Type 4-PLe	1960	RESOLUTION	30	12	3829	0±4 / 0±12 m	≥ Ø 30 mm	≤ 23.5	-30±55 °C	-	-	EMITTER/RECEIVER	1W/2W	1-2446038-9/1-2446038-9	195x	TYPE 4	TYPE 4 - SIL 3 - PL e
29	2-2446038-1	SLC4-H30-211	2163	2100	Type 4-PLe	2110	RESOLUTION	30	12	4049	0±4 / 0±12 m	≥ Ø 30 mm	≤ 25	-30±55 °C	-	-	EMITTER/RECEIVER	1W/2W	2-2446038-1/2-2446038-1	210x	TYPE 4	TYPE 4 - SIL 3 - PL e
30	2-2446038-2	SLC4-H30-226	2313	2250	Type 4-PLe	2260	RESOLUTION	30	12	4349	0±4 / 0±12 m	≥ Ø 30 mm	≤ 26.5	-30±55 °C	-	-	EMITTER/RECEIVER	1W/2W	2-2446038-2/2-2446038-2	225x	TYPE 4	TYPE 4 - SIL 3 - PL e
31	2447896-1	SLC4-H40-016	213	150	Type 4-PLe	160	RESOLUTION	40	12	589	0±4 / 0±12 m	≥ Ø 40 mm	≤ 3.5 ms	-30±55 °C	-	-	EMITTER/RECEIVER	1W/2W	2447896-1/2447896-1	15x	TYPE 4	TYPE 4 - SIL 3 - PL e
32	2447896-2	SLC4-H40-026	313	250	Type 4-PLe	260	RESOLUTION	40	12	789	0±4 / 0±12 m	≥ Ø 40 mm	≤ 4 ms	-30±55 °C	-	-	EMITTER/RECEIVER	1W/2W	2447896-2/2447896-2	25x	TYPE 4	TYPE 4 - SIL 3 - PL e
33	2447896-3	SLC4-H40-031	363	300	Type 4-PLe	310	RESOLUTION	40	12	849	0±4 / 0±12 m	≥ Ø 40 mm	≤ 4.5 ms	-30±55 °C	-	-	EMITTER/RECEIVER	1W/2W	2447896-3/2447896-3	30x	TYPE 4	TYPE 4 - SIL 3 - PL e
34	2447896-4	SLC4-H40-046	513	450	Type 4-PLe	460	RESOLUTION	40	12	1119	0±4 / 0±12 m	≥ Ø 40 mm	≤ 5 ms	-30±55 °C	-	-	EMITTER/RECEIVER	1W/2W	2447896-4/2447896-4	45x	TYPE 4	TYPE 4 - SIL 3 - PL e
35	2447896-6	SLC4-H40-061	663	600	Type 4-PLe	610	RESOLUTION	40	12	1409	0±4 / 0±12 m	≥ Ø 40 mm	≤ 7 ms	-30±55 °C	-	-	EMITTER/RECEIVER	1W/2W	2447896-6/2447896-6	60x	TYPE 4	TYPE 4 - SIL 3 - PL e
36	2447896-7	SLC4-H40-076	813	750	Type 4-PLe	760	RESOLUTION	40	12	1649	0±4 / 0±12 m	≥ Ø 40 mm	≤ 8 ms	-30±55 °C	-	-	EMITTER/RECEIVER	1W/2W	2447896-7/2447896-7	75x	TYPE 4	TYPE 4 - SIL 3 - PL e
37	2447896-9	SLC4-H40-091	963	900	Type 4-PLe	910	RESOLUTION	40	12	1889	0±4 / 0±12 m	≥ Ø 40 mm	≤ 9 ms	-30±55 °C	-	-	EMITTER/RECEIVER	1W/2W	2447896-9/2447896-9	90x	TYPE 4	TYPE 4 - SIL 3 - PL e
38	1-2447896-0	SLC4-H40-106	1113	1050	Type 4-PLe	1060	RESOLUTION	40	12	2189	0±4 / 0±12 m	≥ Ø 40 mm	≤ 10 ms	-30±55 °C	-	-	EMITTER/RECEIVER	1W/2W	1-2447896-0/1-2447896-0	105x	TYPE 4	TYPE 4 - SIL 3 - PL e
39	1-2447896-2	SLC4-H40-121	1263	1200	Type 4-PLe	1210	RESOLUTION	40	12	2509	0±4 / 0±12 m	≥ Ø 40 mm	≤ 11 ms	-30±55 °C	-	-	EMITTER/RECEIVER	1W/2W	1-2447896-2/1-2447896-2	120x	TYPE 4	TYPE 4 - SIL 3 - PL e
40	1-2447896-3	SLC4-H40-136	1413	1350	Type 4-PLe	1360	RESOLUTION	40	12	2789	0±4 / 0±12 m	≥ Ø 40 mm	≤ 12.5 ms	-30±55 °C	-	-	EMITTER/RECEIVER	1W/2W	1-2447896-3/1-2447896-3	135x	TYPE 4	TYPE 4 - SIL 3 - PL e
41	1-2447896-5	SLC4-H40-151	1563	1500	Type 4-PLe	1510	RESOLUTION	40	12	3069	0±4 / 0±12 m	≥ Ø 40 mm	≤ 13.5 ms	-30±55 °C	-	-	EMITTER/RECEIVER	1W/2W	1-2447896-5/1-2447896-5	150x	TYPE 4	TYPE 4 - SIL 3 - PL e
42	1-2447896-6	SLC4-H40-166	1713	1650	Type 4-PLe	1660	RESOLUTION	40	12	3349	0±4 / 0±12 m	≥ Ø 40 mm	≤ 14.5 ms	-30±55 °C	-	-	EMITTER/RECEIVER	1W/2W	1-2447896-6/1-2447896-6	165x	TYPE 4	TYPE 4 - SIL 3 - PL e
43	1-2447896-8	SLC4-H40-181	1863	1800	Type 4-PLe	1810	RESOLUTION	40	12	3569	0±4 / 0±12 m	≥ Ø 40 mm	≤ 15.5 ms	-30±55 °C	-	-	EMITTER/RECEIVER	1W/2W	1-2447896-8/1-2447896-8	180x	TYPE 4	TYPE 4 - SIL 3 - PL e
44	1-2447896-9	SLC4-H40-196	2013	1950	Type 4-PLe	1960	RESOLUTION	40	12	3829	0±4 / 0±12 m	≥ Ø 40 mm	≤ 16.5 ms	-30±55 °C	-	-	EMITTER/RECEIVER	1W/2W	1-2447896-9/1-2447896-9	195x	TYPE 4	TYPE 4 - SIL 3 - PL e
45	2-2447896-1	SLC4-H40-211	2163	2100	Type 4-PLe	2110	RESOLUTION	40	12	4049	0±4 / 0±12 m	≥ Ø 40 mm	≤ 17.5 ms	-30±55 °C	-	-	EMITTER/RECEIVER	1W/2W	2-2447896-1/2-2447896-1	210x	TYPE 4	TYPE 4 - SIL 3 - PL e
46	2-2447896-2	SLC4-H40-226	2313	2250	Type 4-PLe	2260	RESOLUTION	40	12	4349	0±4 / 0±12 m	≥ Ø 40 mm	≤ 18.5 ms	-30±55 °C	-	-	EMITTER/RECEIVER	1W/2W	2-2447896-2/2-2447896-2	225x	TYPE 4	TYPE 4 - SIL 3 - PL e
47	2447897-1	SLC4-B50-016	213	150	Type 4-PLe	160	RESOLUTION	50	12	589	0±4 / 0±12 m	≥ Ø 50 mm	≤ 3 ms	-30±55 °C	-	-	EMITTER/RECEIVER	1W/2W	2447897-1/2447897-1	15x	TYPE 4	TYPE 4 - SIL 3 - PL e
48	2447897-3	SLC4-B50-031	363	300	Type 4-PLe	310	RESOLUTION	50	12	849	0±4 / 0±12 m	≥ Ø 50 mm	≤ 4 ms	-30±55 °C	-	-	EMITTER/RECEIVER	1W/2W	2447897-3/2447897-3	30x	TYPE 4	TYPE 4 - SIL 3 - PL e
49	2447897-4	SLC4-B50-046	513	450	Type 4-PLe	460	RESOLUTION	50	12	1119	0±4 / 0±12 m	≥ Ø 50 mm	≤ 4.5 ms	-30±55 °C	-	-	EMITTER/RECEIVER	1W/2W	2447897-4/2447897-4	45x	TYPE 4	TYPE 4 - SIL 3 - PL e
50	2447897-6	SLC4-B50-061	663	600	Type 4-PLe	610	RESOLUTION	50	12	1409	0±4 / 0±12 m	≥ Ø 50 mm	≤ 5.5 ms	-30±55 °C	-	-	EMITTER/RECEIVER	1W/2W	2447897-6/2447897-6	60x	TYPE 4	TYPE 4 - SIL 3 - PL e
51	2447897-7	SLC4-B50-076	813	750	Type 4-PLe	760	RESOLUTION	50	12	1649	0±4 / 0±12 m	≥ Ø 50 mm	≤ 6.5 ms	-30±55 °C	-	-	EMITTER/RECEIVER	1W/2W	2447897-7/2447897-7	75x	TYPE 4	TYPE 4 - SIL 3 - PL e
52	2447897-9	SLC4-B50-091	963	900	Type 4-PLe	910	RESOLUTION	50	12	1889	0±4 / 0±12 m	≥ Ø 50 mm	≤ 7.5 ms	-30±55 °C	-	-	EMITTER/RECEIVER	1W/2W	2447897-9/2447897-9	90x	TYPE 4	TYPE 4 - SIL 3 - PL e
53	1-2447897-0	SLC4-B50-106	1113	1050	Type 4-PLe	1060	RESOLUTION	50	12	2189	0±4 / 0±12 m	≥ Ø 50 mm	≤ 8.5 ms	-30±55 °C	-	-	EMITTER/RECEIVER	1W/2W	1-2447897-0/1-2447897-0	105x	TYPE 4	TYPE 4 - SIL 3 - PL e
54	1-2447897-2	SLC4-B50-121	1263	1200	Type 4-PLe	1210	RESOLUTION	50	12	2509	0±4 / 0±12 m	≥ Ø 50 mm	≤ 9 ms	-30±55 °C	-	-	EMITTER/RECEIVER	1W/2W	1-2447897-2/1-2447897-2	120x	TYPE 4	TYPE 4 - SIL 3 - PL e
55	1-2447897-3	SLC4-B50-136	1413	1350	Type 4-PLe	1360	RESOLUTION	50	12	2789	0±4 / 0±12 m	≥ Ø 50 mm	≤ 10 ms	-30±55 °C	-	-	EMITTER/RECEIVER	1W/2W	1-2447897-3/1-2447897-3	135x	TYPE 4	TYPE 4 - SIL 3 - PL e
56	1-2447897-5	SLC4-B50-151	1563	1500	Type 4-PLe	1510	RESOLUTION	50	12	3069	0±4 / 0±12 m	≥ Ø 50 mm	≤ 11 ms	-30±55 °C	-	-	EMITTER/RECEIVER	1W/2W	1-2447897-5/1-2447897-5	150x	TYPE 4	TYPE 4 - SIL 3 - PL e
57	1-2447897-6	SLC4-B50-166	1713	1650	Type 4-PLe	1660	RESOLUTION	50	12	3349	0±4 / 0±12 m	≥ Ø 50 mm	≤ 12 ms	-30±55 °C	-	-	EMITTER/RECEIVER	1W/2W	1-2447897-6/1-2447897-6	165x	TYPE 4	TYPE 4 - SIL 3 - PL e
58	1-2447897-8	SLC4-B50-181	1863	1800	Type 4-PLe	1810	RESOLUTION	50	12	3569	0±4 / 0±12 m	≥ Ø 50 mm	≤ 13 ms	-30±55 °C	-	-	EMITTER/RECEIVER	1W/2W	1-2447897-8/1-2447897-8	180x	TYPE 4	TYPE 4 - SIL 3 - PL e
59	1-2447897-9	SLC4-B50-196	2013	1950	Type 4-PLe	1960	RESOLUTION	50	12	3829	0±4 / 0±12 m	≥ Ø 50 mm	≤ 14 ms	-30±55 °C	-	-	EMITTER/RECEIVER	1W/2W	1-2447897-9/1-2447897-9	195x	TYPE 4	TYPE 4 - SIL 3 - PL e
60	2-2447897-1	SLC4-B50-211	2163	2100	Type 4-PLe	2110	RESOLUTION	50	12	4049	0±4 / 0±12 m	≥ Ø 50 mm	≤ 15 ms	-30±55 °C	-	-	EMITTER/RECEIVER	1W/2W	2-2447897-1/2-2447897-1	210x	TYPE 4	TYPE 4 - SIL 3 - PL e
61	2-2447897-2	SLC4-B50-226	2313	2250	Type 4-PLe	2260	RESOLUTION	50	12	4349	0±4 / 0±12 m	≥ Ø 50 mm	≤ 16 ms	-30±55 °C	-	-	EMITTER/RECEIVER	1W/2W	2-2447897-2/2-2447897-2	225x	TYPE 4	TYPE 4 - SIL 3 - PL e
62	2447899-3	SLC4-B90-031	363	300	Type 4-PLe	310	RESOLUTION	90	12	849	0±4 / 0±12 m	≥ Ø 90 mm	≤ 3 ms	-30±55 °C	-	-	EMITTER/RECEIVER	1W/2W	2447899-3/2447899-3	30x	TYPE 4	TYPE 4 - SIL 3 - PL e
63	2447899-4	SLC4-B90-046	513	450	Type 4-PLe	460	RESOLUTION	90	12	1119	0±4 / 0±12 m	≥ Ø 90 mm	≤ 3.5 ms	-30±55 °C	-	-	EMITTER/RECEIVER	1W/2W	2447899-4/2447899-4	45x	TYPE 4	TYPE 4 - SIL 3 - PL e
64	2447899-6	SLC4-B90-061	663	600	Type 4-PLe	610	RESOLUTION	90	12	1409	0±4 / 0±12 m	≥ Ø 90 mm	≤ 4 ms	-30±55 °C	-	-	EMITTER/RECEIVER	1W/2W	2447899-6/2447899-6	60x	TYPE 4	TYPE 4 - SIL 3 - PL e
65	2447899-7	SLC4-B90-076	813	750	Type 4-PLe	760	RESOLUTION	90	12	1649	0±4 / 0±12 m	≥ Ø 90 mm	≤ 4.5 ms	-30±55 °C	-	-	EMITTER/RECEIVER	1W/2W	2447899-7/2447899-7	75x	TYPE 4	TYPE 4 - SIL 3 - PL e

THIS DRAWING IS A CONTROLLED DOCUMENT.

DIMENSIONS: mm

TOLERANCES UNLESS OTHERWISE SPECIFIED:
0 PLC ± -
1 PLC ± 1
2 PLC ± 1
3 PLC ± 1
4 PLC ± 1
ANGLES ± -

MATERIAL - -
FINISH - -

DWN Irfan S 21APRIL2023
CHK Vishal G 21APRIL2023
APVD Rafeeq. Mohd 21APRIL2023
PRODUCT SPEC SLC4-F14-016
APPLICATION SPEC -
WEIGHT REF. TABLE

TE Connectivity

NAME SLC4-F14-016 - -

SIZE	CAGE CODE	DRAWING NO	RESTRICTED TO
A1	00779	C- 1SNP300560-0100	-

CUSTOMER DRAWING | SCALE 3:2 | SHEET 2 OF 5 | REV B2

4805 (3/13)

REVISIONS				
P	LTR	DESCRIPTION	DATE	DWN	APVD
	A	INITIAL REVISION	05MAY2023	NG	RM
	B	ADDED MARKING	18JUL2023	IS	RM

SL.NO	TCPN ($PN)	TE Type ($TYPE)	A (mm)	B (mm)	Safety level	Protected height (mm) ($DHPH)	CO	Resolution (mm)	Max. Range (m)	Net weight (g)	$WR	$DC	$RT	$WT	$NB	$LP	$PT	$PC	$PN	Models	$CL1	$CL2
66	2447899-9	SLC4-B90-091	963	900	Type 4-PLe	910	RESOLUTION	90	12	1889	0÷4 / 0÷12 m	≥ Ø 90 mm	≤ 5 ms	-30÷55 °C	-	-	EMITTER/RECEIVER	1W/2W	2447899-9/2447899-9	90x	TYPE 4	TYPE 4 - SIL 3 - PL e
67	1-2447899-0	SLC4-B90-106	1113	1050	Type 4-PLe	1060	RESOLUTION	90	12	2189	0÷4 / 0÷12 m	≥ Ø 90 mm	≤ 5.5 ms	-30÷55 °C	-	-	EMITTER/RECEIVER	1W/2W	1-2447899-0/1-2447899-0	105x	TYPE 4	TYPE 4 - SIL 3 - PL e
68	1-2447899-2	SLC4-B90-121	1263	1200	Type 4-PLe	1210	RESOLUTION	90	12	2509	0÷4 / 0÷12 m	≥ Ø 90 mm	≤ 5.5 ms	-30÷55 °C	-	-	EMITTER/RECEIVER	1W/2W	1-2447899-2/1-2447899-2	120x	TYPE 4	TYPE 4 - SIL 3 - PL e
69	1-2447899-3	SLC4-B90-136	1413	1350	Type 4-PLe	1360	RESOLUTION	90	12	2789	0÷4 / 0÷12 m	≥ Ø 90 mm	≤ 6 ms	-30÷55 °C	-	-	EMITTER/RECEIVER	1W/2W	1-2447899-3/1-2447899-3	135x	TYPE 4	TYPE 4 - SIL 3 - PL e
70	1-2447899-5	SLC4-B90-151	1563	1500	Type 4-PLe	1510	RESOLUTION	90	12	3069	0÷4 / 0÷12 m	≥ Ø 90 mm	≤ 6.5 ms	-30÷55 °C	-	-	EMITTER/RECEIVER	1W/2W	1-2447899-5/1-2447899-5	150x	TYPE 4	TYPE 4 - SIL 3 - PL e
71	1-2447899-6	SLC4-B90-166	1713	1650	Type 4-PLe	1660	RESOLUTION	90	12	3349	0÷4 / 0÷12 m	≥ Ø 90 mm	≤ 7 ms	-30÷55 °C	-	-	EMITTER/RECEIVER	1W/2W	1-2447899-6/1-2447899-6	165x	TYPE 4	TYPE 4 - SIL 3 - PL e
72	1-2447899-8	SLC4-B90-181	1863	1800	Type 4-PLe	1810	RESOLUTION	90	12	3569	0÷4 / 0÷12 m	≥ Ø 90 mm	≤ 7.5 ms	-30÷55 °C	-	-	EMITTER/RECEIVER	1W/2W	1-2447899-8/1-2447899-8	180x	TYPE 4	TYPE 4 - SIL 3 - PL e
73	1-2447899-9	SLC4-B90-196	2013	1950	Type 4-PLe	1960	RESOLUTION	90	12	3829	0÷4 / 0÷12 m	≥ Ø 90 mm	≤ 8 ms	-30÷55 °C	-	-	EMITTER/RECEIVER	1W/2W	1-2447899-9/1-2447899-9	195x	TYPE 4	TYPE 4 - SIL 3 - PL e
74	2-2447899-1	SLC4-B90-211	2163	2100	Type 4-PLe	2110	RESOLUTION	90	12	4049	0÷4 / 0÷12 m	≥ Ø 90 mm	≤ 8.5 ms	-30÷55 °C	-	-	EMITTER/RECEIVER	1W/2W	2-2447899-1/2-2447899-1	210x	TYPE 4	TYPE 4 - SIL 3 - PL e
75	2-2447899-2	SLC4-B90-226	2313	2250	Type 4-PLe	2260	RESOLUTION	90	12	4349	0÷4 / 0÷12 m	≥ Ø 90 mm	≤ 9 ms	-30÷55 °C	-	-	EMITTER/RECEIVER	1W/2W	2-2447899-2/2-2447899-2	225x	TYPE 4	TYPE 4 - SIL 3 - PL e
76	2447900-5	SLC4-B2B-051	653	590	Type 4-PLe	510	MULTIBEAM	2 Rays	12	1269	0÷4 / 0÷12 m	-	≤ 2.5 ms	-30÷55 °C	2	500mm	EMITTER/RECEIVER	1W/2W	2447900-5/2447900-5	2B	TYPE 4	TYPE 4 - SIL 3 - PL e
77	2447900-8	SLC4-B3B-081	953	890	Type 4-PLe	810	MULTIBEAM	3 Rays	12	1749	0÷4 / 0÷12 m	-	≤ 3 ms	-30÷55 °C	3	400mm	EMITTER/RECEIVER	1W/2W	2447900-8/2447900-8	3B	TYPE 4	TYPE 4 - SIL 3 - PL e
78	2447900-9	SLC4-B4B-091	963	900	Type 4-PLe	910	MULTIBEAM	4 Rays	12	1921	0÷4 / 0÷12 m	-	≤ 3 ms	-30÷55 °C	4	300mm	EMITTER/RECEIVER	1W/2W	2447900-9/2447900-9	4B	TYPE 4	TYPE 4 - SIL 3 - PL e
79	2447901-1	SLC4-H20-016L	213	150	Type 4-PLe	160	RESOLUTION	20	20	589	0÷10 / 3÷20 m	≥ Ø 20 mm	≤ 4 ms	-20÷55 °C	-	-	EMITTER/RECEIVER	1W/2W	2447901-1/2447901-1	15x	TYPE 4	TYPE 4 - SIL 3 - PL e
80	2447901-3	SLC4-H20-031L	363	300	Type 4-PLe	310	RESOLUTION	20	20	849	0÷10 / 3÷20 m	≥ Ø 20 mm	≤ 5.5 ms	-20÷55 °C	-	-	EMITTER/RECEIVER	1W/2W	2447901-3/2447901-3	30x	TYPE 4	TYPE 4 - SIL 3 - PL e
81	2447901-4	SLC4-H20-046L	513	450	Type 4-PLe	460	RESOLUTION	20	20	1119	0÷10 / 3÷20 m	≥ Ø 20 mm	≤ 7.5 ms	-20÷55 °C	-	-	EMITTER/RECEIVER	1W/2W	2447901-4/2447901-4	45x	TYPE 4	TYPE 4 - SIL 3 - PL e
82	2447901-6	SLC4-H20-061L	663	600	Type 4-PLe	610	RESOLUTION	20	20	1409	0÷10 / 3÷20 m	≥ Ø 20 mm	≤ 9 ms	-20÷55 °C	-	-	EMITTER/RECEIVER	1W/2W	2447901-6/2447901-6	60x	TYPE 4	TYPE 4 - SIL 3 - PL e
83	2447901-7	SLC4-H20-076L	813	750	Type 4-PLe	760	RESOLUTION	20	20	1649	0÷10 / 3÷20 m	≥ Ø 20 mm	≤ 11 ms	-20÷55 °C	-	-	EMITTER/RECEIVER	1W/2W	2447901-7/2447901-7	75x	TYPE 4	TYPE 4 - SIL 3 - PL e
84	2447901-9	SLC4-H20-091L	963	900	Type 4-PLe	910	RESOLUTION	20	20	1889	0÷10 / 3÷20 m	≥ Ø 20 mm	≤ 13 ms	-20÷55 °C	-	-	EMITTER/RECEIVER	1W/2W	2447901-9/2447901-9	90x	TYPE 4	TYPE 4 - SIL 3 - PL e
85	1-2447901-0	SLC4-H20-106L	1113	1050	Type 4-PLe	1060	RESOLUTION	20	20	2189	0÷10 / 3÷20 m	≥ Ø 20 mm	≤ 14.5 ms	-20÷55 °C	-	-	EMITTER/RECEIVER	1W/2W	1-2447901-0/1-2447901-0	105x	TYPE 4	TYPE 4 - SIL 3 - PL e
86	1-2447901-2	SLC4-H20-121L	1263	1200	Type 4-PLe	1210	RESOLUTION	20	20	2509	0÷10 / 3÷20 m	≥ Ø 20 mm	≤ 16.5 ms	-20÷55 °C	-	-	EMITTER/RECEIVER	1W/2W	1-2447901-2/1-2447901-2	120x	TYPE 4	TYPE 4 - SIL 3 - PL e
87	1-2447901-3	SLC4-H20-136L	1413	1350	Type 4-PLe	1360	RESOLUTION	20	20	2789	0÷10 / 3÷20 m	≥ Ø 20 mm	≤ 18 ms	-20÷55 °C	-	-	EMITTER/RECEIVER	1W/2W	1-2447901-3/1-2447901-3	135x	TYPE 4	TYPE 4 - SIL 3 - PL e
88	1-2447901-5	SLC4-H20-151L	1563	1500	Type 4-PLe	1510	RESOLUTION	20	20	3069	0÷10 / 3÷20 m	≥ Ø 20 mm	≤ 20 ms	-20÷55 °C	-	-	EMITTER/RECEIVER	1W/2W	1-2447901-5/1-2447901-5	150x	TYPE 4	TYPE 4 - SIL 3 - PL e
89	1-2447901-6	SLC4-H20-166L	1713	1650	Type 4-PLe	1660	RESOLUTION	20	20	3349	0÷10 / 3÷20 m	≥ Ø 20 mm	≤ 22 ms	-20÷55 °C	-	-	EMITTER/RECEIVER	1W/2W	1-2447901-6/1-2447901-6	165x	TYPE 4	TYPE 4 - SIL 3 - PL e
90	1-2447901-8	SLC4-H20-181L	1863	1800	Type 4-PLe	1810	RESOLUTION	20	20	3569	0÷10 / 3÷20 m	≥ Ø 20 mm	≤ 23.5 ms	-20÷55 °C	-	-	EMITTER/RECEIVER	1W/2W	1-2447901-8/1-2447901-8	180x	TYPE 4	TYPE 4 - SIL 3 - PL e
91	1-2447901-9	SLC4-H20-196L	2013	1950	Type 4-PLe	1960	RESOLUTION	20	20	3829	0÷10 / 3÷20 m	≥ Ø 20 mm	≤ 25 ms	-20÷55 °C	-	-	EMITTER/RECEIVER	1W/2W	1-2447901-9/1-2447901-9	195x	TYPE 4	TYPE 4 - SIL 3 - PL e
92	2447902-1	SLC4-H30-016L	213	150	Type 4-PLe	160	RESOLUTION	30	20	589	0÷10 / 3÷20 m	≥ Ø 30 mm	≤ 3 ms	-20÷55 °C	-	-	EMITTER/RECEIVER	1W/2W	2447902-1/2447902-1	15x	TYPE 4	TYPE 4 - SIL 3 - PL e
93	2447902-3	SLC4-H30-031L	363	300	Type 4-PLe	310	RESOLUTION	30	20	849	0÷10 / 3÷20 m	≥ Ø 30 mm	≤ 4 ms	-20÷55 °C	-	-	EMITTER/RECEIVER	1W/2W	2447902-3/2447902-3	30x	TYPE 4	TYPE 4 - SIL 3 - PL e
94	2447902-4	SLC4-H30-046L	513	450	Type 4-PLe	460	RESOLUTION	30	20	1119	0÷10 / 3÷20 m	≥ Ø 30 mm	≤ 5 ms	-20÷55 °C	-	-	EMITTER/RECEIVER	1W/2W	2447902-4/2447902-4	45x	TYPE 4	TYPE 4 - SIL 3 - PL e
95	2447902-6	SLC4-H30-061L	663	600	Type 4-PLe	610	RESOLUTION	30	20	1409	0÷10 / 3÷20 m	≥ Ø 30 mm	≤ 6 ms	-20÷55 °C	-	-	EMITTER/RECEIVER	1W/2W	2447902-6/2447902-6	60x	TYPE 4	TYPE 4 - SIL 3 - PL e
96	2447902-7	SLC4-H30-076L	813	750	Type 4-PLe	760	RESOLUTION	30	20	1649	0÷10 / 3÷20 m	≥ Ø 30 mm	≤ 6.5 ms	-20÷55 °C	-	-	EMITTER/RECEIVER	1W/2W	2447902-7/2447902-7	75x	TYPE 4	TYPE 4 - SIL 3 - PL e
97	1-2447902-0	SLC4-H30-091L	963	900	Type 4-PLe	910	RESOLUTION	30	20	1889	0÷10 / 3÷20 m	≥ Ø 30 mm	≤ 7.5 ms	-20÷55 °C	-	-	EMITTER/RECEIVER	1W/2W	1-2447902-0/1-2447902-0	90x	TYPE 4	TYPE 4 - SIL 3 - PL e
98	1-2447902-1	SLC4-H30-106L	1113	1050	Type 4-PLe	1060	RESOLUTION	30	20	2189	0÷10 / 3÷20 m	≥ Ø 30 mm	≤ 8.5 ms	-20÷55 °C	-	-	EMITTER/RECEIVER	1W/2W	1-2447902-1/1-2447902-1	105x	TYPE 4	TYPE 4 - SIL 3 - PL e
99	1-2447902-2	SLC4-H30-121L	1263	1200	Type 4-PLe	1210	RESOLUTION	30	20	2509	0÷10 / 3÷20 m	≥ Ø 30 mm	≤ 9.5 ms	-20÷55 °C	-	-	EMITTER/RECEIVER	1W/2W	1-2447902-2/1-2447902-2	120x	TYPE 4	TYPE 4 - SIL 3 - PL e
100	1-2447902-3	SLC4-H30-136L	1413	1350	Type 4-PLe	1360	RESOLUTION	30	20	2789	0÷10 / 3÷20 m	≥ Ø 30 mm	≤ 10 ms	-20÷55 °C	-	-	EMITTER/RECEIVER	1W/2W	1-2447902-3/1-2447902-3	135x	TYPE 4	TYPE 4 - SIL 3 - PL e
101	1-2447902-5	SLC4-H30-151L	1563	1500	Type 4-PLe	1510	RESOLUTION	30	20	3069	0÷10 / 3÷20 m	≥ Ø 30 mm	≤ 11 ms	-20÷55 °C	-	-	EMITTER/RECEIVER	1W/2W	1-2447902-5/1-2447902-5	150x	TYPE 4	TYPE 4 - SIL 3 - PL e
102	1-2447902-6	SLC4-H30-166L	1713	1650	Type 4-PLe	1660	RESOLUTION	30	20	3349	0÷10 / 3÷20 m	≥ Ø 30 mm	≤ 12 ms	-20÷55 °C	-	-	EMITTER/RECEIVER	1W/2W	1-2447902-6/1-2447902-6	165x	TYPE 4	TYPE 4 - SIL 3 - PL e
103	1-2447902-8	SLC4-H30-181L	1863	1800	Type 4-PLe	1810	RESOLUTION	30	20	3569	0÷10 / 3÷20 m	≥ Ø 30 mm	≤ 13 ms	-20÷55 °C	-	-	EMITTER/RECEIVER	1W/2W	1-2447902-8/1-2447902-8	180x	TYPE 4	TYPE 4 - SIL 3 - PL e
104	1-2447902-9	SLC4-H30-196L	2013	1950	Type 4-PLe	1960	RESOLUTION	30	20	3829	0÷10 / 3÷20 m	≥ Ø 30 mm	≤ 14 ms	-20÷55 °C	-	-	EMITTER/RECEIVER	1W/2W	1-2447902-9/1-2447902-9	195x	TYPE 4	TYPE 4 - SIL 3 - PL e
105	2-2447902-1	SLC4-H30-211L	2163	2100	Type 4-PLe	2110	RESOLUTION	30	20	4049	0÷10 / 3÷20 m	≥ Ø 30 mm	≤ 14.5 ms	-20÷55 °C	-	-	EMITTER/RECEIVER	1W/2W	2-2447902-1/2-2447902-1	210x	TYPE 4	TYPE 4 - SIL 3 - PL e
106	2-2447902-2	SLC4-H30-226L	2313	2250	Type 4-PLe	2260	RESOLUTION	30	20	4349	0÷10 / 3÷20 m	≥ Ø 30 mm	≤ 15.5 ms	-20÷55 °C	-	-	EMITTER/RECEIVER	1W/2W	2-2447902-2/2-2447902-2	225x	TYPE 4	TYPE 4 - SIL 3 - PL e
107	2447903-1	SLC4-H40-016L	213	150	Type 4-PLe	160	RESOLUTION	40	20	589	0÷10 / 3÷20 m	≥ Ø 40 mm	≤ 3 ms	-20÷55 °C	-	-	EMITTER/RECEIVER	1W/2W	2447903-1/2447903-1	15x	TYPE 4	TYPE 4 - SIL 3 - PL e
108	2447903-3	SLC4-H40-031L	363	300	Type 4-PLe	310	RESOLUTION	40	20	849	0÷10 / 3÷20 m	≥ Ø 40 mm	≤ 3.5 ms	-20÷55 °C	-	-	EMITTER/RECEIVER	1W/2W	2447903-3/2447903-3	30x	TYPE 4	TYPE 4 - SIL 3 - PL e
109	2447903-4	SLC4-H40-046L	513	450	Type 4-PLe	460	RESOLUTION	40	20	1119	0÷10 / 3÷20 m	≥ Ø 40 mm	≤ 4 ms	-20÷55 °C	-	-	EMITTER/RECEIVER	1W/2W	2447903-4/2447903-4	45x	TYPE 4	TYPE 4 - SIL 3 - PL e
110	2447903-6	SLC4-H40-061L	663	600	Type 4-PLe	610	RESOLUTION	40	20	1409	0÷10 / 3÷20 m	≥ Ø 40 mm	≤ 4.5 ms	-20÷55 °C	-	-	EMITTER/RECEIVER	1W/2W	2447903-6/2447903-6	60x	TYPE 4	TYPE 4 - SIL 3 - PL e
111	2447903-7	SLC4-H40-076L	813	750	Type 4-PLe	760	RESOLUTION	40	20	1649	0÷10 / 3÷20 m	≥ Ø 40 mm	≤ 5 ms	-20÷55 °C	-	-	EMITTER/RECEIVER	1W/2W	2447903-7/2447903-7	75x	TYPE 4	TYPE 4 - SIL 3 - PL e
112	2447903-9	SLC4-H40-091L	963	900	Type 4-PLe	910	RESOLUTION	40	20	1889	0÷10 / 3÷20 m	≥ Ø 40 mm	≤ 6 ms	-20÷55 °C	-	-	EMITTER/RECEIVER	1W/2W	2447903-9/2447903-9	90x	TYPE 4	TYPE 4 - SIL 3 - PL e
113	1-2447903-0	SLC4-H40-106L	1113	1050	Type 4-PLe	1060	RESOLUTION	40	20	2189	0÷10 / 3÷20 m	≥ Ø 40 mm	≤ 6.5 ms	-20÷55 °C	-	-	EMITTER/RECEIVER	1W/2W	1-2447903-0/1-2447903-0	105x	TYPE 4	TYPE 4 - SIL 3 - PL e
114	1-2447903-2	SLC4-H40-121L	1263	1200	Type 4-PLe	1210	RESOLUTION	40	20	2509	0÷10 / 3÷20 m	≥ Ø 40 mm	≤ 7 ms	-20÷55 °C	-	-	EMITTER/RECEIVER	1W/2W	1-2447903-2/1-2447903-2	120x	TYPE 4	TYPE 4 - SIL 3 - PL e
115	1-2447903-3	SLC4-H40-136L	1413	1350	Type 4-PLe	1360	RESOLUTION	40	20	2789	0÷10 / 3÷20 m	≥ Ø 40 mm	≤ 7.5 ms	-20÷55 °C	-	-	EMITTER/RECEIVER	1W/2W	1-2447903-3/1-2447903-3	135x	TYPE 4	TYPE 4 - SIL 3 - PL e
116	1-2447903-5	SLC4-H40-151L	1563	1500	Type 4-PLe	1510	RESOLUTION	40	20	3069	0÷10 / 3÷20 m	≥ Ø 40 mm	≤ 8 ms	-20÷55 °C	-	-	EMITTER/RECEIVER	1W/2W	1-2447903-5/1-2447903-5	150x	TYPE 4	TYPE 4 - SIL 3 - PL e
117	1-2447903-6	SLC4-H40-166L	1713	1650	Type 4-PLe	1660	RESOLUTION	40	20	3349	0÷10 / 3÷20 m	≥ Ø 40 mm	≤ 8.5 ms	-20÷55 °C	-	-	EMITTER/RECEIVER	1W/2W	1-2447903-6/1-2447903-6	165x	TYPE 4	TYPE 4 - SIL 3 - PL e
118	1-2447903-8	SLC4-H40-181L	1863	1800	Type 4-PLe	1810	RESOLUTION	40	20	3569	0÷10 / 3÷20 m	≥ Ø 40 mm	≤ 9.5 ms	-20÷55 °C	-	-	EMITTER/RECEIVER	1W/2W	1-2447903-8/1-2447903-8	180x	TYPE 4	TYPE 4 - SIL 3 - PL e
119	1-2447903-9	SLC4-H40-196L	2013	1950	Type 4-PLe	1960	RESOLUTION	40	20	3829	0÷10 / 3÷20 m	≥ Ø 40 mm	≤ 10 ms	-20÷55 °C	-	-	EMITTER/RECEIVER	1W/2W	1-2447903-9/1-2447903-9	195x	TYPE 4	TYPE 4 - SIL 3 - PL e
120	2-2447903-1	SLC4-H40-211L	2163	2100	Type 4-PLe	2110	RESOLUTION	40	20	4049	0÷10 / 3÷20 m	≥ Ø 40 mm	≤ 10.5 ms	-20÷55 °C	-	-	EMITTER/RECEIVER	1W/2W	2-2447903-1/2-2447903-1	210x	TYPE 4	TYPE 4 - SIL 3 - PL e
121	2-2447903-2	SLC4-H40-226L	2313	2250	Type 4-PLe	2260	RESOLUTION	40	20	4349	0÷10 / 3÷20 m	≥ Ø 40 mm	≤ 11 ms	-20÷55 °C	-	-	EMITTER/RECEIVER	1W/2W	2-2447903-2/2-2447903-2	225x	TYPE 4	TYPE 4 - SIL 3 - PL e
122	2447904-1	SLC4-B50-016L	213	150	Type 4-PLe	160	RESOLUTION	50	20	589	0÷10 / 3÷20 m	≥ Ø 50 mm	≤ 2.5 ms	-20÷55 °C	-	-	EMITTER/RECEIVER	1W/2W	2447904-1/2447904-1	15x	TYPE 4	TYPE 4 - SIL 3 - PL e
123	2447904-3	SLC4-B50-031L	363	300	Type 4-PLe	310	RESOLUTION	50	20	849	0÷10 / 3÷20 m	≥ Ø 50 mm	≤ 3 ms	-20÷55 °C	-	-	EMITTER/RECEIVER	1W/2W	2447904-3/2447904-3	30x	TYPE 4	TYPE 4 - SIL 3 - PL e
124	2447904-4	SLC4-B50-046L	513	450	Type 4-PLe	460	RESOLUTION	50	20	1119	0÷10 / 3÷20 m	≥ Ø 50 mm	≤ 3.5 ms	-20÷55 °C	-	-	EMITTER/RECEIVER	1W/2W	2447904-4/2447904-4	45x	TYPE 4	TYPE 4 - SIL 3 - PL e
125	2447904-6	SLC4-B50-061L	663	600	Type 4-PLe	610	RESOLUTION	50	20	1409	0÷10 / 3÷20 m	≥ Ø 50 mm	≤ 4 ms	-20÷55 °C	-	-	EMITTER/RECEIVER	1W/2W	2447904-6/2447904-6	60x	TYPE 4	TYPE 4 - SIL 3 - PL e
126	2447904-7	SLC4-B50-076L	813	750	Type 4-PLe	760	RESOLUTION	50	20	1649	0÷10 / 3÷20 m	≥ Ø 50 mm	≤ 4.5 ms	-20÷55 °C	-	-	EMITTER/RECEIVER	1W/2W	2447904-7/2447904-7	75x	TYPE 4	TYPE 4 - SIL 3 - PL e
127	2447904-9	SLC4-B50-091L	963	900	Type 4-PLe	910	RESOLUTION	50	20	1889	0÷10 / 3÷20 m	≥ Ø 50 mm	≤ 5 ms	-20÷55 °C	-	-	EMITTER/RECEIVER	1W/2W	2447904-9/2447904-9	90x	TYPE 4	TYPE 4 - SIL 3 - PL e
128	1-2447904-0	SLC4-B50-106L	1113	1050	Type 4-PLe	1060	RESOLUTION	50	20	2189	0÷10 / 3÷20 m	≥ Ø 50 mm	≤ 5.5 ms	-20÷55 °C	-	-	EMITTER/RECEIVER	1W/2W	1-2447904-0/1-2447904-0	105x	TYPE 4	TYPE 4 - SIL 3 - PL e
129	1-2447904-2	SLC4-B50-121L	1263	1200	Type 4-PLe	1210	RESOLUTION	50	20	2509	0÷10 / 3÷20 m	≥ Ø 50 mm	≤ 6 ms	-20÷55 °C	-	-	EMITTER/RECEIVER	1W/2W	1-2447904-2/1-2447904-2	120x	TYPE 4	TYPE 4 - SIL 3 - PL e
130	1-2447904-3	SLC4-B50-136L	1413	1350	Type 4-PLe	1360	RESOLUTION	50	20	2789	0÷10 / 3÷20 m	≥ Ø 50 mm	≤ 6.5 ms	-20÷55 °C	-	-	EMITTER/RECEIVER	1W/2W	1-2447904-3/1-2447904-3	135x	TYPE 4	TYPE 4 - SIL 3 - PL e

THIS DRAWING IS A CONTROLLED DOCUMENT.

DIMENSIONS:

TOLERANCES UNLESS OTHERWISE SPECIFIED:
0 PLC ±
1 PLC ±
2 PLC ±
3 PLC ±
4 PLC ±
ANGLES ±

MATERIAL
FINISH

DWN
CHK
APVD
PRODUCT SPEC
APPLICATION SPEC
WEIGHT

TE Connectivity

NAME

SIZE A1 | CAGE CODE | DRAWING NO | RESTRICTED TO

SCALE | SHEET OF | REV

4805 (3/13)

© 2023 TE Connectivity. All Rights Reserved.

REVISIONS					
P	LTR	DESCRIPTION	DATE	DWN	APVD
	A	INITIAL REVISION	05MAY2023	NG	RM
	B	ADDED MARKING	18JUL2023	IS	RM

SL.NO	TCPN ($PN)	TE Type ($TYPE)	A (mm)	B (mm)	Safety level	Protected height (mm) ($DHPH)	CO	Resolution (mm)	Max. Range (m)	Net weight (g)	$WR	$DC	$RT	$WT	$NB	$LP	$PT	$PC	$PN	Models	$CL1	$CL2
131	1-2447904-5	SLC4-B50-151L	1563	1500	Type 4-PLe	1510	RESOLUTION	50	20	3069	0÷10 / 3÷20 m	≥ Ø 50 mm	≤ 7 ms	-20÷55 °C	-	-	EMITTER/RECEIVER	1W/2W	1-2447904-5/1-2447904-5	150x	TYPE 4	TYPE 4 - SIL 3 - PL e
132	1-2447904-6	SLC4-B50-166L	1713	1650	Type 4-PLe	1660	RESOLUTION	50	20	3349	0÷10 / 3÷20 m	≥ Ø 50 mm	≤ 7 ms	-20÷55 °C	-	-	EMITTER/RECEIVER	1W/2W	1-2447904-6/1-2447904-6	165x	TYPE 4	TYPE 4 - SIL 3 - PL e
133	1-2447904-8	SLC4-B50-181L	1863	1800	Type 4-PLe	1810	RESOLUTION	50	20	3569	0÷10 / 3÷20 m	≥ Ø 50 mm	≤ 8 ms	-20÷55 °C	-	-	EMITTER/RECEIVER	1W/2W	1-2447904-8/1-2447904-8	180x	TYPE 4	TYPE 4 - SIL 3 - PL e
134	1-2447904-9	SLC4-B50-196L	2013	1950	Type 4-PLe	1960	RESOLUTION	50	20	3829	0÷10 / 3÷20 m	≥ Ø 50 mm	≤ 8 ms	-20÷55 °C	-	-	EMITTER/RECEIVER	1W/2W	1-2447904-9/1-2447904-9	195x	TYPE 4	TYPE 4 - SIL 3 - PL e
135	2-2447904-1	SLC4-B50-211L	2163	2100	Type 4-PLe	2110	RESOLUTION	50	20	4049	0÷10 / 3÷20 m	≥ Ø 50 mm	≤ 9 ms	-20÷55 °C	-	-	EMITTER/RECEIVER	1W/2W	2-2447904-1/2-2447904-1	210x	TYPE 4	TYPE 4 - SIL 3 - PL e
136	2-2447904-2	SLC4-B50-226L	2313	2250	Type 4-PLe	2260	RESOLUTION	50	20	4349	0÷10 / 3÷20 m	≥ Ø 50 mm	≤ 9 ms	-20÷55 °C	-	-	EMITTER/RECEIVER	1W/2W	2-2447904-2/2-2447904-2	225x	TYPE 4	TYPE 4 - SIL 3 - PL e
137	2447905-3	SLC4-B90-031L	363	300	Type 4-PLe	310	RESOLUTION	90	20	849	0÷10 / 3÷20 m	≥ Ø 90 mm	≤ 2.5 ms	-20÷55 °C	-	-	EMITTER/RECEIVER	1W/2W	2447905-3/2447905-3	30x	TYPE 4	TYPE 4 - SIL 3 - PL e
138	2447905-4	SLC4-B90-046L	513	450	Type 4-PLe	460	RESOLUTION	90	20	1119	0÷10 / 3÷20 m	≥ Ø 90 mm	≤ 3 ms	-20÷55 °C	-	-	EMITTER/RECEIVER	1W/2W	2447905-4/2447905-4	45x	TYPE 4	TYPE 4 - SIL 3 - PL e
139	2447905-6	SLC4-B90-061L	663	600	Type 4-PLe	610	RESOLUTION	90	20	1409	0÷10 / 3÷20 m	≥ Ø 90 mm	≤ 3 ms	-20÷55 °C	-	-	EMITTER/RECEIVER	1W/2W	2447905-6/2447905-6	60x	TYPE 4	TYPE 4 - SIL 3 - PL e
140	2447905-7	SLC4-B90-076L	813	750	Type 4-PLe	760	RESOLUTION	90	20	1649	0÷10 / 3÷20 m	≥ Ø 90 mm	≤ 3.5 ms	-20÷55 °C	-	-	EMITTER/RECEIVER	1W/2W	2447905-7/2447905-7	75x	TYPE 4	TYPE 4 - SIL 3 - PL e
141	2447905-9	SLC4-B90-091L	963	900	Type 4-PLe	910	RESOLUTION	90	20	1889	0÷10 / 3÷20 m	≥ Ø 90 mm	≤ 3.5 ms	-20÷55 °C	-	-	EMITTER/RECEIVER	1W/2W	2447905-9/2447905-9	90x	TYPE 4	TYPE 4 - SIL 3 - PL e
142	1-2447905-0	SLC4-B90-106L	1113	1050	Type 4-PLe	1060	RESOLUTION	90	20	2189	0÷10 / 3÷20 m	≥ Ø 90 mm	≤ 3.5 ms	-20÷55 °C	-	-	EMITTER/RECEIVER	1W/2W	1-2447905-0/1-2447905-0	105x	TYPE 4	TYPE 4 - SIL 3 - PL e
143	1-2447905-2	SLC4-B90-121L	1263	1200	Type 4-PLe	1210	RESOLUTION	90	20	2509	0÷10 / 3÷20 m	≥ Ø 90 mm	≤ 4 ms	-20÷55 °C	-	-	EMITTER/RECEIVER	1W/2W	1-2447905-2/1-2447905-2	120x	TYPE 4	TYPE 4 - SIL 3 - PL e
144	1-2447905-3	SLC4-B90-136L	1413	1350	Type 4-PLe	1360	RESOLUTION	90	20	2789	0÷10 / 3÷20 m	≥ Ø 90 mm	≤ 4 ms	-20÷55 °C	-	-	EMITTER/RECEIVER	1W/2W	1-2447905-3/1-2447905-3	135x	TYPE 4	TYPE 4 - SIL 3 - PL e
145	1-2447905-5	SLC4-B90-151L	1563	1500	Type 4-PLe	1510	RESOLUTION	90	20	3069	0÷10 / 3÷20 m	≥ Ø 90 mm	≤ 4.5 ms	-20÷55 °C	-	-	EMITTER/RECEIVER	1W/2W	1-2447905-5/1-2447905-5	150x	TYPE 4	TYPE 4 - SIL 3 - PL e
146	1-2447905-6	SLC4-B90-166L	1713	1650	Type 4-PLe	1660	RESOLUTION	90	20	3349	0÷10 / 3÷20 m	≥ Ø 90 mm	≤ 4.5 ms	-20÷55 °C	-	-	EMITTER/RECEIVER	1W/2W	1-2447905-6/1-2447905-6	165x	TYPE 4	TYPE 4 - SIL 3 - PL e
147	1-2447905-8	SLC4-B90-181L	1863	1800	Type 4-PLe	1810	RESOLUTION	90	20	3569	0÷10 / 3÷20 m	≥ Ø 90 mm	≤ 5 ms	-20÷55 °C	-	-	EMITTER/RECEIVER	1W/2W	1-2447905-8/1-2447905-8	180x	TYPE 4	TYPE 4 - SIL 3 - PL e
148	1-2447905-9	SLC4-B90-196L	2013	1950	Type 4-PLe	1960	RESOLUTION	90	20	3829	0÷10 / 3÷20 m	≥ Ø 90 mm	≤ 5.5 ms	-20÷55 °C	-	-	EMITTER/RECEIVER	1W/2W	1-2447905-9/1-2447905-9	195x	TYPE 4	TYPE 4 - SIL 3 - PL e
149	2-2447905-1	SLC4-B90-211L	2163	2100	Type 4-PLe	2110	RESOLUTION	90	20	4049	0÷10 / 3÷20 m	≥ Ø 90 mm	≤ 6 ms	-20÷55 °C	-	-	EMITTER/RECEIVER	1W/2W	2-2447905-1/2-2447905-1	210x	TYPE 4	TYPE 4 - SIL 3 - PL e
150	2-2447905-2	SLC4-B90-226L	2313	2250	Type 4-PLe	2260	RESOLUTION	90	20	4349	0÷10 / 3÷20 m	≥ Ø 90 mm	≤ 6 ms	-20÷55 °C	-	-	EMITTER/RECEIVER	1W/2W	2-2447905-2/2-2447905-2	225x	TYPE 4	TYPE 4 - SIL 3 - PL e
151	2447906-5	SLC4-B2B-051L	653	590	Type 4-PLe	510	MULTIBEAM	2 Rays	20	1269	0÷10 / 3÷20 m	-	≤ 2.5 ms	-20÷55 °C	2	500mm	EMITTER/RECEIVER	1W/2W	2447906-5/2447906-5	2B	TYPE 4	TYPE 4 - SIL 3 - PL e
152	2447906-8	SLC4-B3B-081L	953	890	Type 4-PLe	810	MULTIBEAM	3 Rays	20	1749	0÷10 / 3÷20 m	-	≤ 2.5 ms	-20÷55 °C	3	400mm	EMITTER/RECEIVER	1W/2W	2447906-8/2447906-8	3B	TYPE 4	TYPE 4 - SIL 3 - PL e
153	2447906-9	SLC4-B4B-091L	963	900	Type 4-PLe	910	MULTIBEAM	4 Rays	20	1921	0÷10 / 3÷20 m	-	≤ 2.5 ms	-20÷55 °C	4	300mm	EMITTER/RECEIVER	1W/2W	2447906-9/2447906-9	4B	TYPE 4	TYPE 4 - SIL 3 - PL e

MARKING SPECIFICATIONS

DATA TAB - RESOLUTION - EMITTER 01

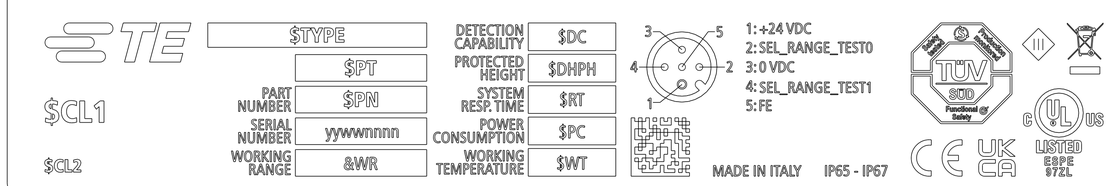

DATA TAB - RESOLUTION - RECEIVER 01

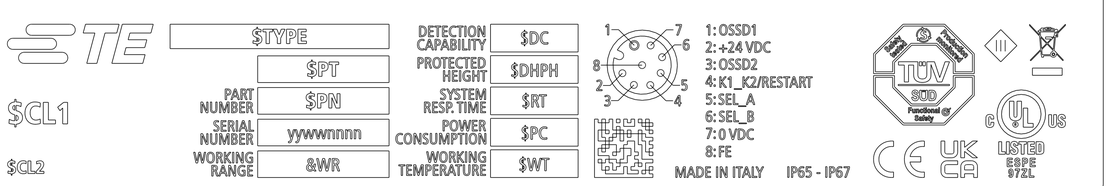

DATA TAB - MULTIBEAM - EMITTER 02

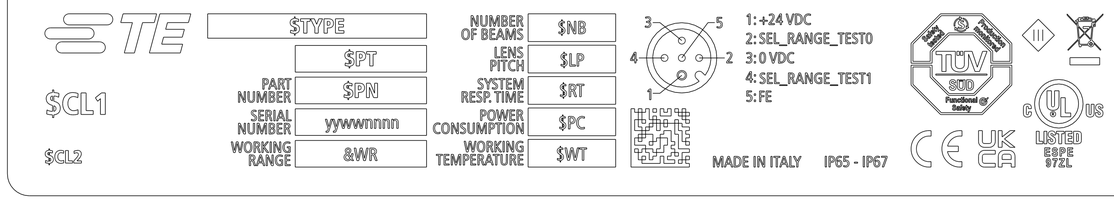

DATA TAB - MULTIBEAM - RECEIVER 02

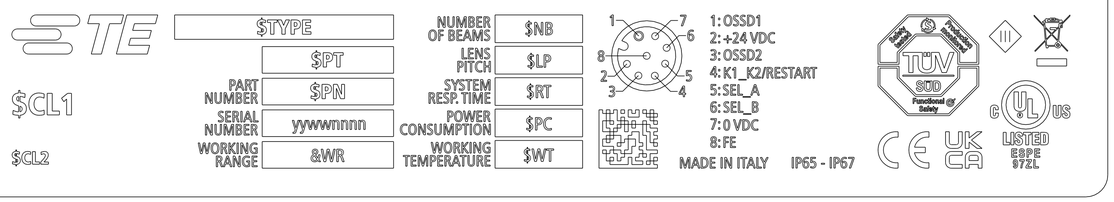

THIS DRAWING IS A CONTROLLED DOCUMENT.

DIMENSIONS: mm

TOLERANCES UNLESS OTHERWISE SPECIFIED:
0 PLC ± 1
1 PLC ± 1
2 PLC ± 1
3 PLC ± 1
4 PLC ± 1
ANGLES ± -

MATERIAL - -

FINISH - -

DWN Irfan S 21APR1L2023
CHK Vishal G 21APR1L2023
APVD Rafeeq. Mohd 21APR1L2023

PRODUCT SPEC SLC4-F14-016
APPLICATION SPEC -
WEIGHT REF. TABLE

TE Connectivity

NAME SLC4-F14-016 - -

SIZE	CAGE CODE	DRAWING NO	RESTRICTED TO
A1	00779	C- 1SNP300560-0100	-

CUSTOMER DRAWING

SCALE 3:2 SHEET 4 OF 5 REV B2

4805 (3/13)

© 2023 TE Connectivity. All Rights Reserved.

REVISIONS					
P	LTR	DESCRIPTION	DATE	DWN	APVD
	A	INITIAL REVISION	05MAY2023	NG	RM
	B	ADDED MARKING	18JUL2023	IS	RM

MARKING SPECIFICATIONS

LIGHT CURTAINS TRANSMITTER-Models with length 15x

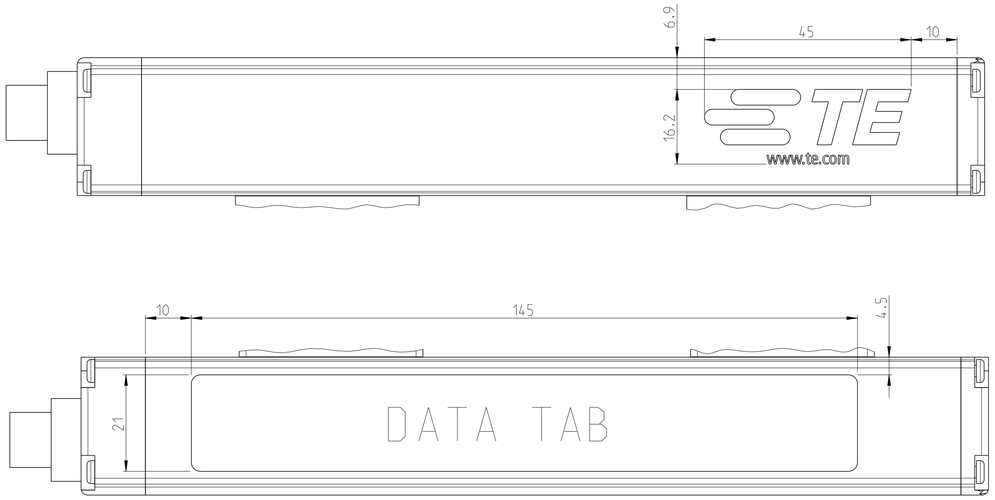

LIGHT CURTAINS RECEIVER-Models with length 15x

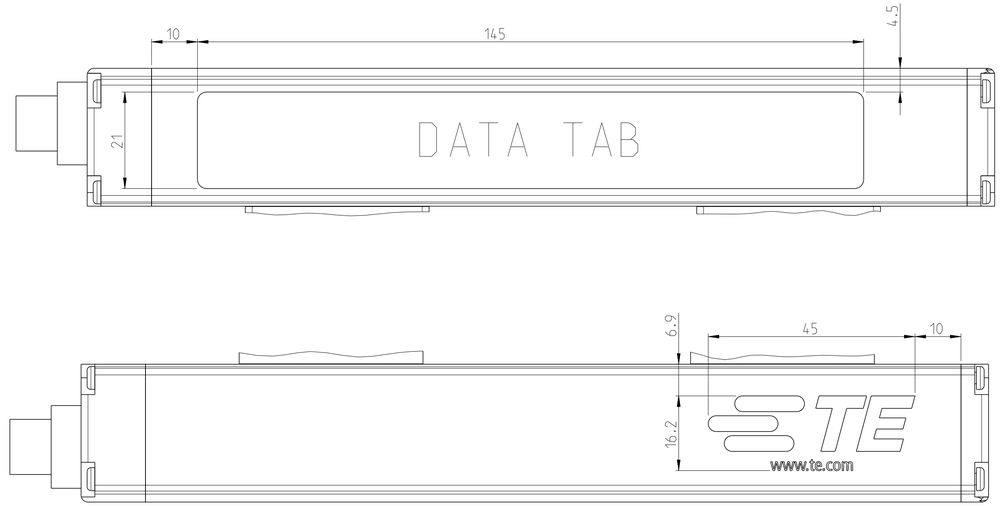

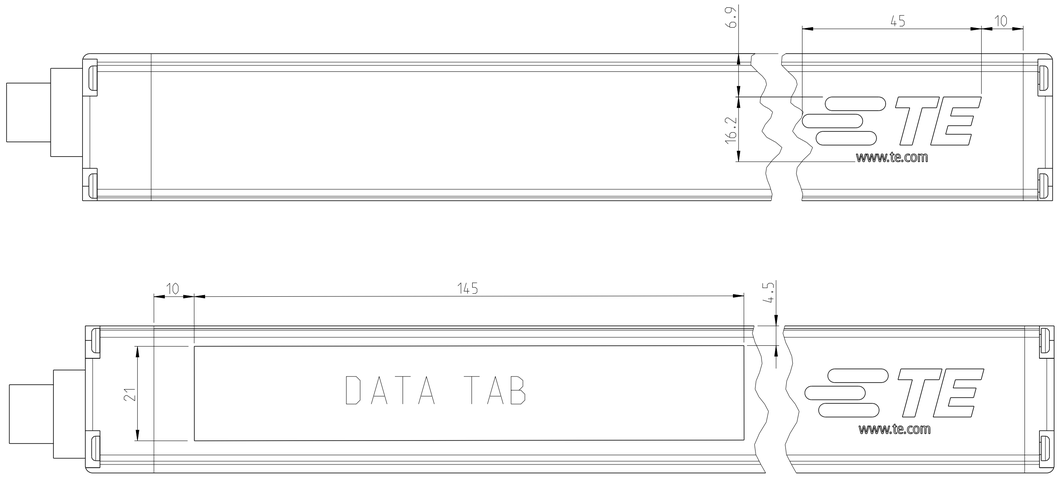

LIGHT CURTAINS TRANSMITTER-Models with length >15x

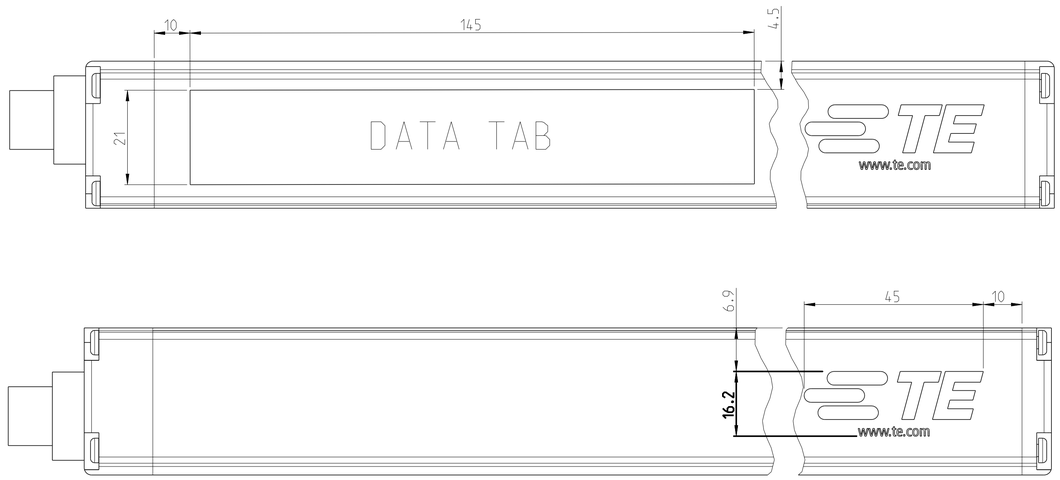

LIGHT CURTAINS RECEIVER-Models with length >15x

Note:

1). Serial number compositioning (8 digits): yywwnnnn
- yy ..... [year of manufacture] .....2 digits (last two digits)
- ww ..... [week of manufacture] .....2 digits
- nnnn ..... [ID code] .....4 digits hex

THIS DRAWING IS A CONTROLLED DOCUMENT.	DWN Irfan S 21APR1L2023	TE	TE Connectivity
	CHK Vishal G 21APR1L2023		
DIMENSIONS: mm	APVD Rafeeq. Mohd 21APR1L2023	NAME SLC4-F14-016	
TOLERANCES UNLESS OTHERWISE SPECIFIED: 0 PLC ± - 1 PLC ± 1 2 PLC ± 1 3 PLC ± 1 4 PLC ± 1 ANGLES ± -	PRODUCT SPEC SLC4-F14-016	-	
	APPLICATION SPEC -	SIZE A1 / CAGE CODE 00779 / DRAWING NO C- 1SNP300560-0100	RESTRICTED TO -
MATERIAL - -	WEIGHT REF. TABLE	FINISH - -	
	CUSTOMER DRAWING	SCALE 3:2 / SHEET 5 OF 5	REV B2