FOR 客户名称	APPROVED 客户确认签字	ATTN 销售负责人

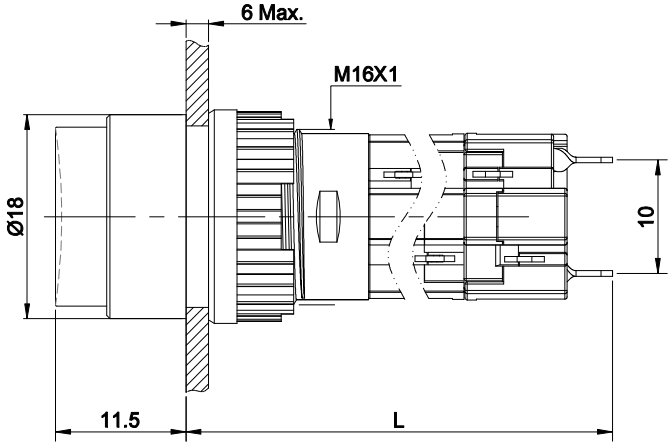

L:1NO1NC L=29
2NO2NC L=36.5

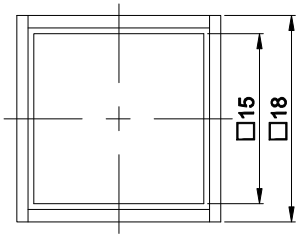

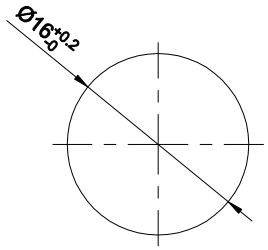

PANEL CUTOUT

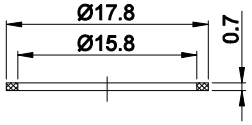

SEAL RING

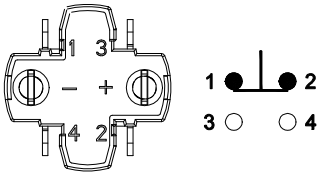

CONTACT COMPOSITION
1、2、3、4 ARE ONE SET;
1,2 ARE NORMAL CLOSED(NC);
3,4 ARE NORMAL OPENED(NO).

PART NUMBER: LAS1F-□■/△

"□"	CONTACT STRUCTURE
11	1NO1NC
22	2NO2NC

"■"	OPERATION MODE
NO LETTER	MOMENTARY
Z	LATCHING

"△"	CAP COLOR
R	RED
G	GREEN
Y	YELLOW
B	BLUE
W	WHITE
N	BLACK

SPECIFICATIONS:
1.SWITCH RATING: Ui:250V, Ith:20A.
2.MECHANICAL LIFE: MOMENTARY ≥1,000,000 cycles;
LATCHING ≥500,000 cycles.
3.ELECTRICAL LIFE: ≥50,000 cycles.
4.CONTACT RESISTANCE: ≤50mΩ.
5.INSULATION RESISTANCE: ≥1000MΩ(500VDC).
6.POWER-FREQUENCY WITHSTAND VOLTAGE:
BETWEEN TERMINALS OF THE SAME POLE:AC 1,500V, RMS 50Hz, 1min;
BETWEEN TERMINALS OF DIFFERENT POLE:AC 2,000V, RMS 50Hz, 1min.
7.OPERATING TEMPERATURE: -25˚C～ +55˚C(NO FREEZING, KEEP THE AIR FLOWING AROUND PUSHBUTTON).
8.OPERATING FORCE: ABOUT 2N(1NO1NC), 3N(2NO2NC).
9.OPERATING TRAVEL: ABOUT 3mm.
10.TERMINAL TYPE: PIN TERMINAL(2 X 0.5mm) .
11.FRONT PANEL PROTECTION DEGREE: IP40.
12.GENERAL TOLERANCE:0-18mm=±0.25, 18-80mm=±0.52.

MATERIALS:
1.CONTACT: SILVER ALLOY.
2.BUTTON: PC.
3.BODY: PC.
4.BASE: UF.

BRAND 品牌	红波按钮制造有限公司 ONPOW PUSH BUTTON MANUFACTURE CO.,LTD.		
ONPOW 欧宝龙®			
TITLE 名称	LAS1 SERIES PUSHBUTTON SWITCH	UNIT 单位	mm
DWG NO. 图号	LAS1F(不带灯)	SCALE 比例 1.5 : 1	SIZE 图纸 A4
FILE NAME 档案名称	LAS1F.DWG	DRAWN 制图 LJJ 2025/07/31	SHEET 张 1/1	REV. 版本 V1.0