FOR 客户名称	APPROVED 客户确认签字	ATTN 销售负责人

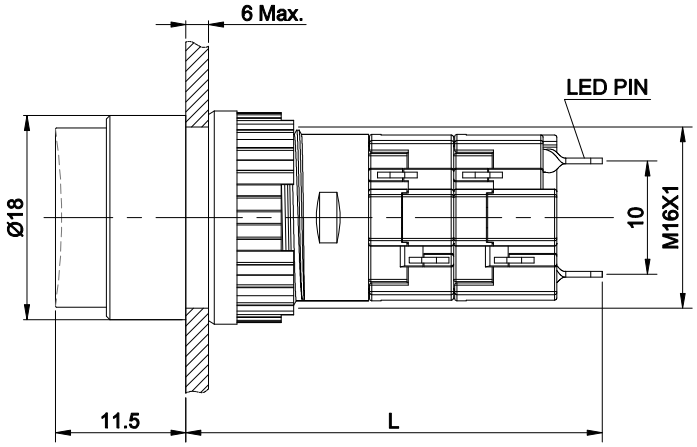

L:1NO1NC L=29
2NO2NC L=36.5

THE SHADED PART IS ILLUMINATED

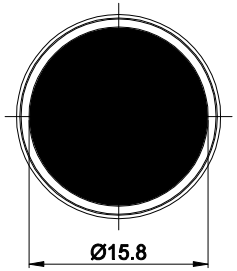

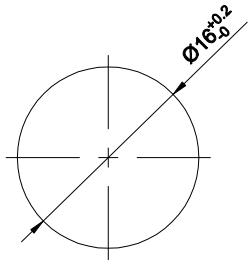

PANEL CUTOUT

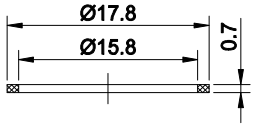

SEAL RING

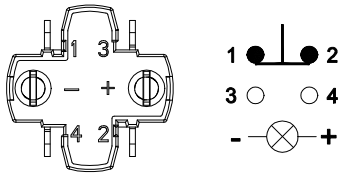

CONTACT COMPOSITION
1、2、3、4 ARE ONE SET;
1,2 ARE NORMAL CLOSED(NC);
3,4 ARE NORMAL OPENED(NO).

PART NUMBER:LAS1Y-□■/△/▲

"□"	CONTACT STRUCTURE
11	1NO1NC
22	2NO2NC

"■"	OPERATION MODE
NO LETTER	MOMENTARY
Z	LATCHING

"△"	LAMP COLOR
R	RED
G	GREEN
Y	YELLOW
B	BLUE
W	WHITE

"▲"	LAMP VOLTAGE
6V	AC/DC 6V
12V	AC/DC 12V
24V	AC/DC 24V
110V	AC/DC 110V (EXTERNAL RESISTOR)
220V	AC/DC 220V (EXTERNAL RESISTOR)
OTHER VOLTAGE CAN BE MADE TO ORDER	

SPECIFICATIONS:
1.SWITCH RATING: Ui:250V, Ith:20A.
2.MECHANICAL LIFE: MOMENTARY ≥1,000,000 cycles;
LATCHING ≥500,000 cycles.
3.ELECTRICAL LIFE: ≥50,000 cycles.
4.CONTACT RESISTANCE: ≤50mΩ.
5.INSULATION RESISTANCE: ≥1000MΩ(500VDC).
6.DIELECTRIC STRENGTH:
BETWEEN CONTACT AND LAMP TERMINALS: 2,000V, RMS 50Hz, 1min.
BETWEEN TERMINALS OF THE SAME POLE: 1,500V, RMS 50Hz, 1min;
BETWEEN TERMINALS OF DIFFERENT POLE: 2,000V, RMS 50Hz, 1min.
7.OPERATING TEMPERATURE: -25℃～ +55℃(NO FREEZING, KEEP THE AIR FLOWING AROUND PUSHBUTTON).
8.OPERATING FORCE: ABOUT 2N(1NO1NC), ABOUT 3N(2NO2NC).
9.OPERATING TRAVEL: ABOUT 3mm.
10.TORQUE: ABOUT 0.6N·m APPLIED TO NUT.
11.FRONT PANEL PROTECTION DEGREE: IP40.
12.TERMINAL TYPE: PIN TERMINAL(2X0.5mm).
13.GENERAL TOLERANCE:0-18mm=±0.25, 18-80mm=±0.52.
14.COMPLIANT WITH RoHS.

MATERIALS:
1.CONTACT: SILVER ALLOY.
2.BUTTON: PC.
3.BODY: PC.
4.BASE: PA.

BRAND 品牌	红波按钮制造有限公司 ONPOW PUSH BUTTON MANUFACTURE CO.,LTD.				
ONPOW 欧宝龙®					
TITLE 名称	LAS1Y SERIES PUSHBUTTON SWITCH			UNIT 单位	mm
DWG NO. 图号	LAS1Y带灯		SCALE 比例 1.5 : 1	SIZE 图纸	A4
FILE NAME 档案名称	LAS1Y.DWG	DRAWN 制图 LJJ 2025/06/27	SHEET 张 1/1	REV. 版本	V1.0