嘉尼企業股份有限公司 CANAL ELECTRONIC CO.,LTD.

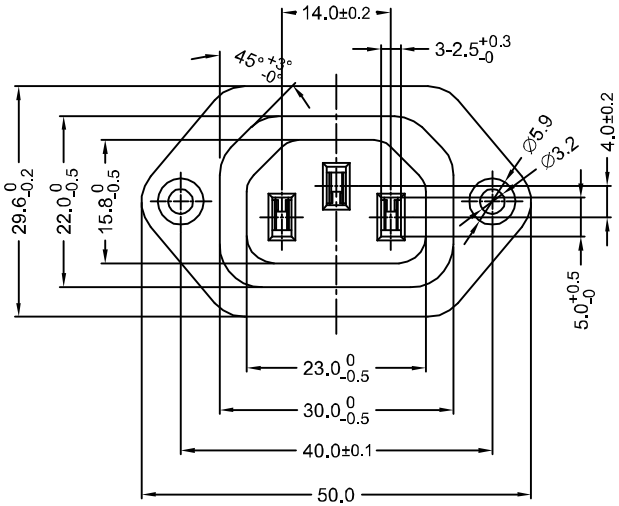

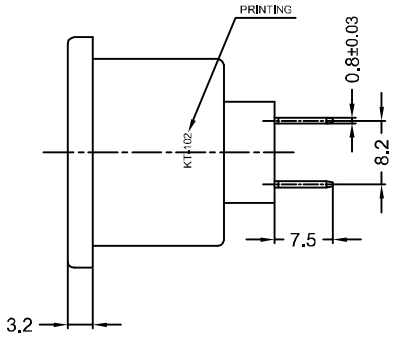

SPECIFICATION MODEL: KT SERIES

RATING: 15A 250VAC (UL/CUL)
10A 250VAC (VDE /CCC)
INSULATION RESISTANCE: 100MΩ (MIN), DC 500V
DIELECTRIC STRENGH: 2,000VAC FOR 1 MINUTE

MATERIAL
HOUSING: PBT+15%GF UL 94V-0

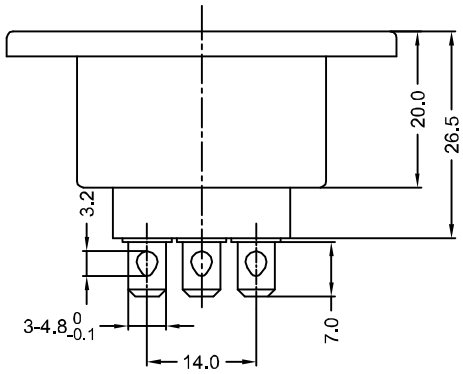

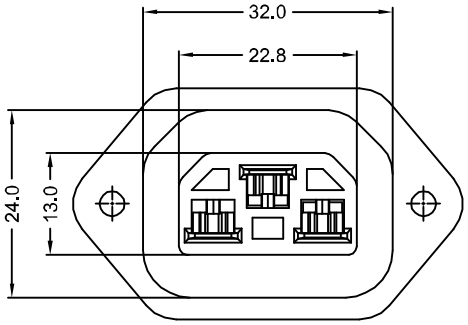

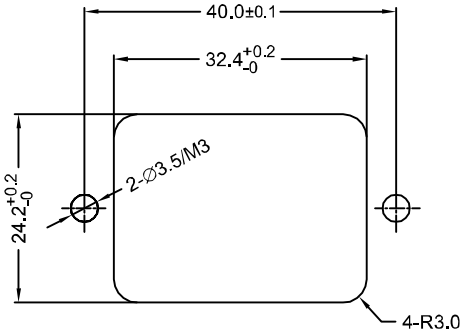

PANEL CUT-OUT

嘉尼企業股份有限公司
工程部
2015.04.10
文件管制章

NOTE: TOLERANCES UNLESS OTHERWISE SPECIFIED:±0.3 mm

REVISION	DESCRIPTION	REVISED BY	TOLERANCES		ANGLE ½°		UNIT	mm	PART NAME	KT SPEC DRAWING	DWG NO
4			DRAWN BY	楊偉韶	DESIGNED BY	蔡 劍	SCALE	1/1			S5992A
3			CHECKED BY	蔡劍	APPROVED BY	蔡劍	DATE	2015.04.02	PART NO	KT-102(W0)	
2											
1 2015.04.02	首次出圖	楊偉韶									