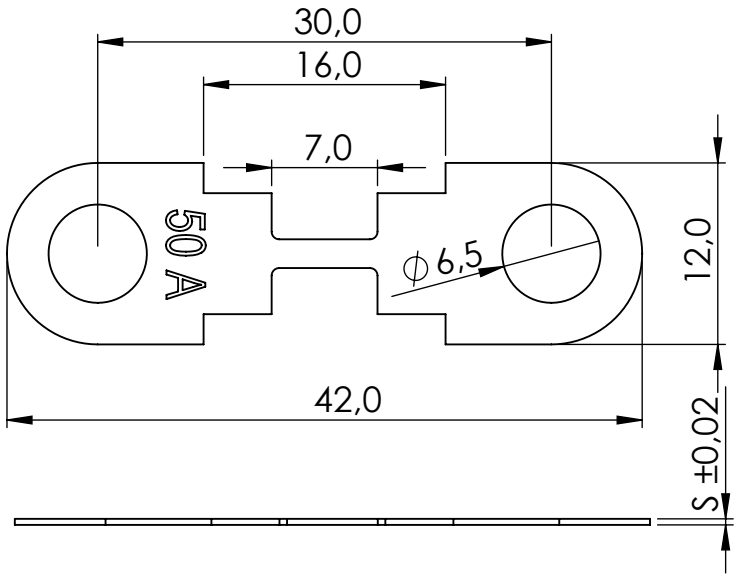

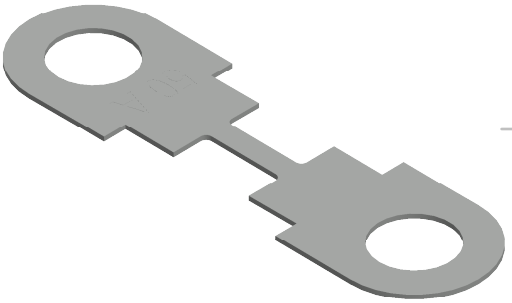

Material Zn:
Domension S varies with current rating

ELED Ref.	Rating (A)	Voltage (V)
MS-O030	30	32
MS-O040	40	32
MS-O050	50	32
MS-O060	60	32
MS-O080	80	32
MS-O100	100	32
MS-O110	110	32
MS-O125	125	32
MS-O150	150	32
MS-O175	175	32

Fusing time (s)		
Load	Min. (s)	Max. (s)
125%	360.000	-
300%	0,1	10
600%	0,02	1
1000%	0,01	0,3

UNLESS OTHERWISE SPECIFIED:
DIMENSIONS ARE IN MILLIMETERS
SURFACE FINISH:
TOLERANCES: +/-0,2
LINEAR:
ANGULAR:

FINISH:

DEBURR AND BREAK SHARP EDGES

DO NOT SCALE DRAWING

REVISION

ELED® On the safe side

	NAME	SIGNATURE	DATE
DRAWN	B.D.		4.24
CHK'D	R.J.		4.24
APPV'D	B.D.		4.24
MFG	www.eled.si		
Q.A			

TITLE:

MSO strip fuse family

MATERIAL:

WEIGHT:

DWG NO.

MSO

A4

SCALE:2:1

SHEET 1 OF 1