嘉尼企業股份有限公司 CANAL ELECTRONIC CO.,LTD.

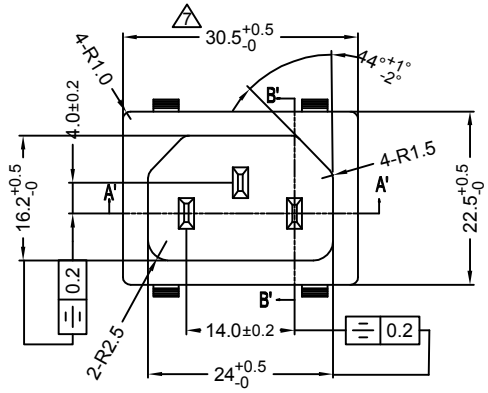

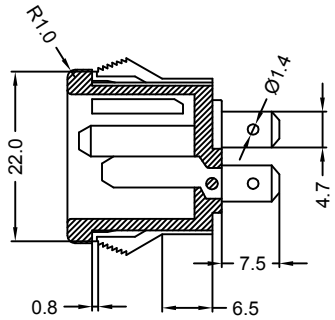

SECTION:B-B'

SPECIFICATION MODEL: KS-202
RATING: 15A 250VAC (UL/ CUL)
10A 250VAC (CCC/ENEC15)
INSULATION RESISTANCE: 100M , DC 500V
DIELECTRIC STRENGTH: 3000VAC FOR 1 MINUTE
MEET UL 498 & IEC/EN60320 REQUIREMENTS

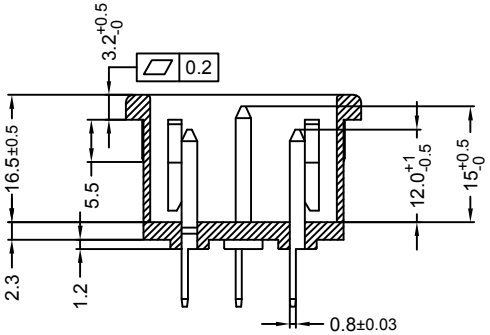

SECTION:A-A'

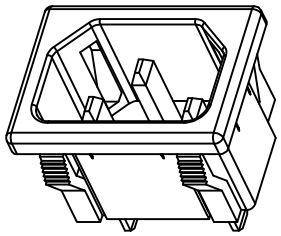

嘉尼工程
2025.07.14
文件管制章

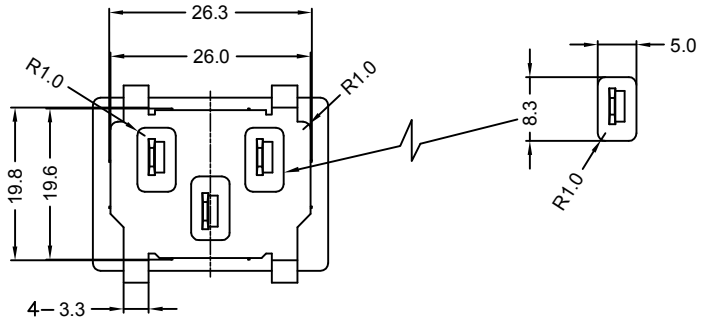

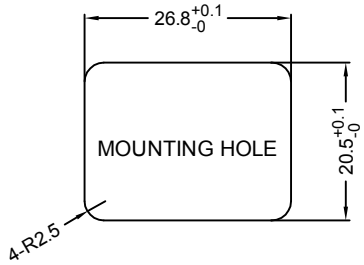

PANEL THICKNESS:0.8mm

NOTE:TOLERANCES UNLESS OTHERWISE SPECIFIED:± .012/0.3(in/mm)

REVISION	DESCRIPTION	REVISED BY	TOLERANCES		ANGLE ½°		UNIT	mm	PART NAME	KS SPEC DRAWING	DWG NO
4			DRAWN BY	楊偉韶	DESIGNED BY	蔡剑	SCALE	1/1			S10456A
3											
2			CHECKED BY		APPROVED BY		DATE	2025.07.15	PART NO	KS-202（W0）	
1 2025.07.14	首次出圖	楊偉韶									