RFPC-SMA30-F	CUSTOMER PRODUCT SPECIFICATION SHEET	RoHS Compliant

RFPC-SMA30-F : RP SMA Right Angle Jack, PCB Connector, 6GHz

Material and Plating:
Insulator: PTFE
Pin: Brass, Gold
Body: Brass, Gold

Specification:
Operating Temperature: -55°C~+125°C
Working Frequency Range: DC~6GHz
Impedance: 50 Ohm.

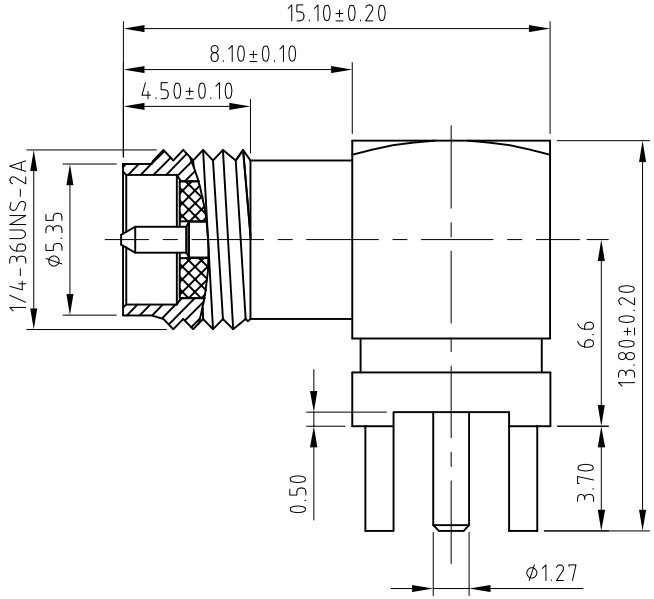

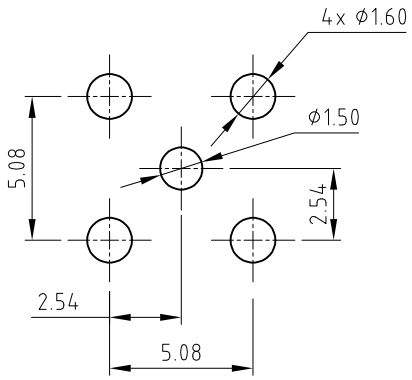

Recommended PCB Layout
Tolerance:±0.05

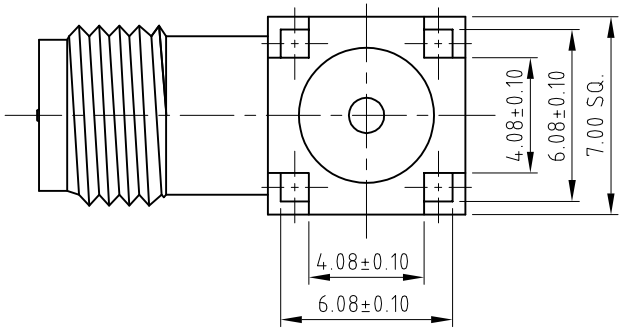

REV.	DATE & DRN	
1.0	24/10/'23 - CC	RELEASE
1.1	29/03/'24 - CC	RELEASE Update product description
1.2	12/05/'25 - NYW	Add GCT logo.

Scale: NTS	THIRD ANGLE	Unstated Tolerances: .X ±0.2, .XX ±0.1, .XXX ±0.05, ANGLES ±3°	Material SEE NOTE
Drawn: CC			
App'd: XXX	Title RP SMA PCB Connector		NOT TO SCALE
Date: 12 MAY '25	Revision: 1.2		Unit: mm

GCT GradConn
www.gct.co www.gradconn.com

© THIS DRAWING IS CONFIDENTIAL AND MUST NOT BE COPIED OR DISCLOSED WITHOUT WRITTEN CONSENT

Type: RFPC-SMA30-F
RFPC-SMA30-F
Drawing Number:
Sheet 1 of 2
Drawing © E and O E

RFPC-SMA30-F	CUSTOMER PRODUCT SPECIFICATION SHEET	RoHS Compliant

RFPC-SMA30-F : RP SMA Right Angle Jack, PCB Connector, 6GHz

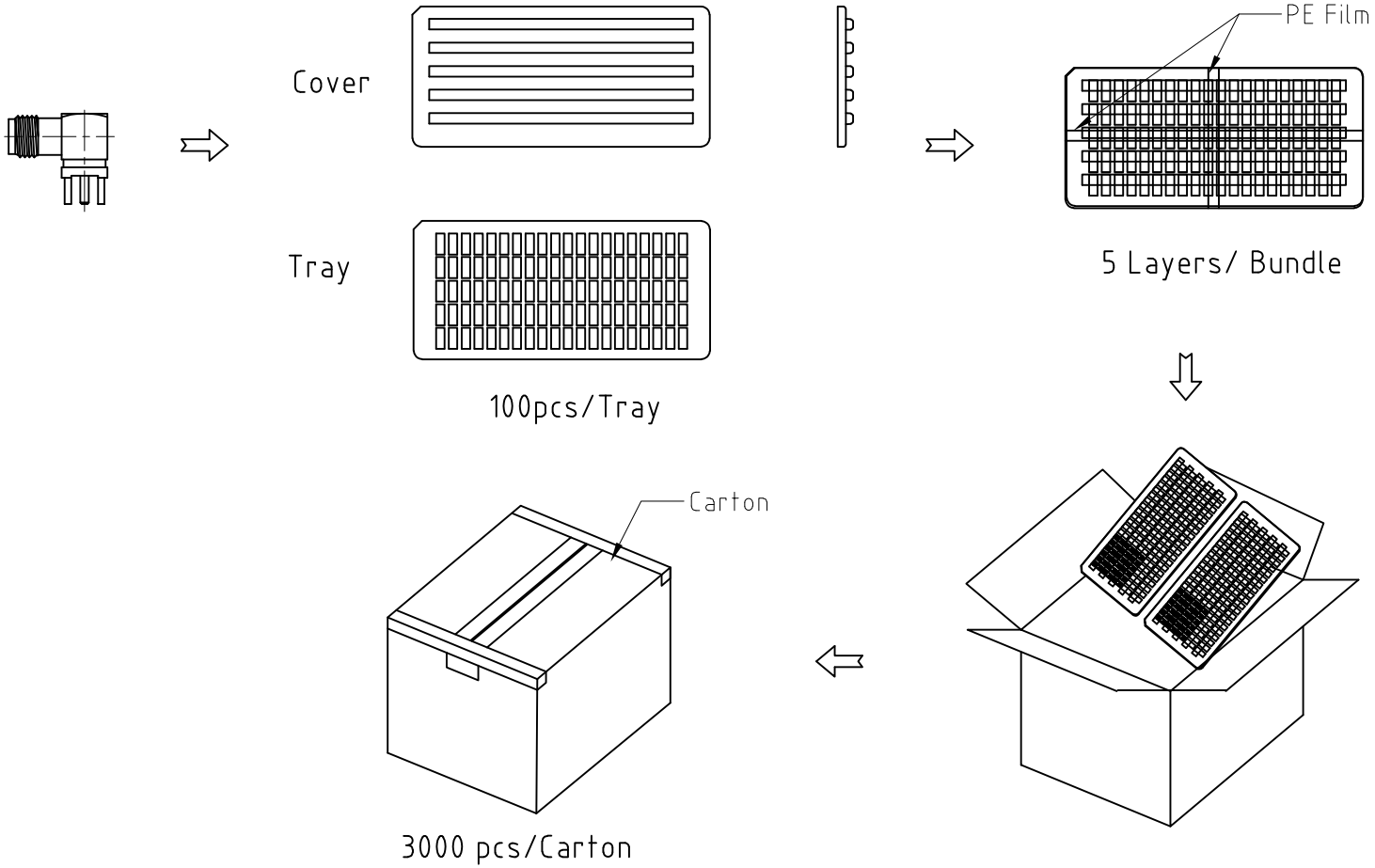

pcs / Tray	Trays / Carton	pcs/Carton
100	30	3000

REV.	DATE & DRN	
1.0	26/10/23 - CC	RELEASE
1.1	29/03/24 - CC	RELEASE Update product description
1.2	12/05/25 - NYW	Add GCT logo.

Scale: NTS	THIRD ANGLE	Unstated Tolerances: .X ±0.2, .XX ±0.1, .XXX ±0.05, ANGLES ±3°	Material SEE NOTE
Drawn: CC			
App'd: XXX	Title RP SMA PCB Connector		NOT TO SCALE
Date: 12 MAY '25	Revision: 1.2		Unit: mm

GCT GradConn
www.gct.co www.gradconn.com

© THIS DRAWING IS CONFIDENTIAL AND MUST NOT BE COPIED OR DISCLOSED WITHOUT WRITTEN CONSENT

Type: RFPC-SMA30-F

RFPC-SMA30-F

Drawing Number:

Sheet 2 of 2

Drawing © E and O E