xE310

Interfaces User Guide

1VV0301600 Rev. 1 – 2022-08-03

TELIT
TECHNICAL
DOCUMENTATION

[01.2017]

Mod.0818 2017-01 Rev.0

SPECIFICATIONS ARE SUBJECT TO CHANGE WITHOUT NOTICE

NOTICE

While reasonable efforts have been made to assure the accuracy of this document, Telit assumes no liability resulting from any inaccuracies or omissions in this document, or from use of the information obtained herein. The information in this document has been carefully checked and is believed to be reliable. However, no responsibility is assumed for inaccuracies or omissions. Telit reserves the right to make changes to any products described herein and reserves the right to revise this document and to make changes from time to time in content hereof with no obligation to notify any person of revisions or changes. Telit does not assume any liability arising out of the application or use of any product, software, or circuit described herein; neither does it convey license under its patent rights or the rights of others.

It is possible that this publication may contain references to, or information about Telit products (machines and programs), programming, or services that are not announced in your country. Such references or information must not be construed to mean that Telit intends to announce such Telit products, programming, or services in your country.

COPYRIGHTS

This instruction manual and the Telit products described in this instruction manual may be, include or describe copyrighted Telit material, such as computer programs stored in semiconductor memories or other media. Laws in the Italy and other countries preserve for Telit and its licensors certain exclusive rights for copyrighted material, including the exclusive right to copy, reproduce in any form, distribute and make derivative works of the copyrighted material. Accordingly, any copyrighted material of Telit and its licensors contained herein or in the Telit products described in this instruction manual may not be copied, reproduced, distributed, merged or modified in any manner without the express written permission of Telit. Furthermore, the purchase of Telit products shall not be deemed to grant either directly or by implication, estoppel, or otherwise, any license under the copyrights, patents or patent applications of Telit, as arises by operation of law in the sale of a product.

COMPUTER SOFTWARE COPYRIGHTS

The Telit and 3rd Party supplied Software (SW) products described in this instruction manual may include copyrighted Telit and other 3rd Party supplied computer programs stored in semiconductor memories or other media. Laws in the Italy and other countries preserve for Telit and other 3rd Party supplied SW certain exclusive rights for copyrighted computer programs, including the exclusive right to copy or reproduce in any form the copyrighted computer program. Accordingly, any copyrighted Telit or other 3rd Party supplied SW computer programs contained in the Telit products described in this instruction manual may not be copied (reverse engineered) or reproduced in any manner without the express written permission of Telit or the 3rd Party SW supplier. Furthermore, the purchase of Telit products shall not be deemed to grant either directly or by implication, estoppel, or otherwise, any license under the copyrights, patents or patent applications of Telit or other 3rd Party supplied SW, except for the normal non-exclusive, royalty free license to use that arises by operation of law in the sale of a product.

USAGE AND DISCLOSURE RESTRICTIONS

I. License Agreements

The software described in this document is the property of Telit and its licensors. It is furnished by express license agreement only and may be used only in accordance with the terms of such an agreement.

II. Copyrighted Materials

Software and documentation are copyrighted materials. Making unauthorized copies is prohibited by law. No part of the software or documentation may be reproduced, transmitted, transcribed, stored in a retrieval system, or translated into any language or computer language, in any form or by any means, without prior written permission of Telit

III. High Risk Materials

Components, units, or third-party products used in the product described herein are NOT fault-tolerant and are NOT designed, manufactured, or intended for use as on-line control equipment in the following hazardous environments requiring fail-safe controls: the operation of Nuclear Facilities, Aircraft Navigation or Aircraft Communication Systems, Air Traffic Control, Life Support, or Weapons Systems (High Risk Activities"). Telit and its supplier(s) specifically disclaim any expressed or implied warranty of fitness for such High Risk Activities.

IV. Trademarks

TELIT and the Stylized T Logo are registered in Trademark Office. All other product or service names are the property of their respective owners.

V. Third Party Rights

The software may include Third Party Right software. In this case you agree to comply with all terms and conditions imposed on you in respect of such separate software. In addition to Third Party Terms, the disclaimer of warranty and limitation of liability provisions in this License shall apply to the Third Party Right software.

TELIT HEREBY DISCLAIMS ANY AND ALL WARRANTIES EXPRESS OR IMPLIED FROM ANY THIRD PARTIES REGARDING ANY SEPARATE FILES, ANY THIRD PARTY MATERIALS INCLUDED IN THE SOFTWARE, ANY THIRD PARTY MATERIALS FROM WHICH THE SOFTWARE IS DERIVED (COLLECTIVELY “OTHER CODE”), AND THE USE OF ANY OR ALL THE OTHER CODE IN CONNECTION WITH THE SOFTWARE, INCLUDING (WITHOUT LIMITATION) ANY WARRANTIES OF SATISFACTORY QUALITY OR FITNESS FOR A PARTICULAR PURPOSE.

NO THIRD PARTY LICENSORS OF OTHER CODE SHALL HAVE ANY LIABILITY FOR ANY DIRECT, INDIRECT, INCIDENTAL, SPECIAL, EXEMPLARY, OR CONSEQUENTIAL DAMAGES (INCLUDING WITHOUT LIMITATION LOST PROFITS), HOWEVER CAUSED AND WHETHER MADE UNDER CONTRACT, TORT OR OTHER LEGAL THEORY, ARISING IN ANY WAY OUT OF THE USE OR DISTRIBUTION OF THE OTHER CODE OR THE EXERCISE OF ANY RIGHTS GRANTED UNDER EITHER OR BOTH THIS LICENSE AND THE LEGAL TERMS APPLICABLE TO ANY SEPARATE FILES, EVEN IF ADVISED OF THE POSSIBILITY OF SUCH DAMAGES.

APPLICABILITY TABLE

- GE310-GNSS Interface for EVK2
- GE310-GNSS Interface TLB
- ME310G1-W1 Interface TLB
- ME310G1-WW Interface TLB
- ME310G1-W2 Interface TLB
- ME310G1-W3 Interface TLB

Contents

COPYRIGHTS **2**

COMPUTER SOFTWARE COPYRIGHTS **2**

USAGE AND DISCLOSURE RESTRICTIONS **3**

APPLICABILITY TABLE **4**

1. INTRODUCTION **8**
1.1. Scope 8
1.2. Audience 8
1.3. Contact Information, Support 8
1.4. Text Conventions 9
1.5. Related Documents 10

2. OVERVIEW **11**

3. GE310 INTERFACE FOR EVK2 ..... **12**
3.1. Description 12
3.2. Physical Dimensions 12
3.3. Interface Details 13
3.3.1. Connectors Position 13
3.3.2. Jumpers Setting 15
3.3.3. SO101 & SO104 – EVK2 Connection 16
3.3.4. Antenna Connectors 20
3.3.5. PL105 - Power Supply Setting 21
3.3.6. SIM Holder and SIM Detection 22
3.3.7. RESET 22
3.3.8. STAT LED 22
3.3.9. Expansion Connectors 23
3.3.10. Audio Section and Settings 26
3.4. GNSS Settings 28
3.4.1. GNSS Signals 28
3.4.2. Hosted GNSS Settings 29
3.5. Interface Stand-alone Use 30
3.6. FIRMWARE UPDATE 30

4. GE310 TLB INTERFACE FOR EVB **31**
4.1. Description 31
4.2. Physical Dimensions 31

4.3. Interface Details 32
4.3.1. Connectors Position 32
4.3.2. Jumpers Setting 34
4.3.3. PL101, PL102, PL103 – EVB Connection 35
4.3.4. Antenna Connectors 37
4.3.5. SIM Holder and SIM Detection 38
4.3.6. RESET 38
4.3.7. STAT LED 38
4.3.8. Expansion Connectors 39
4.4. GNSS Settings 42
4.4.1. GNSS Signals 42
4.4.2. Hosted GNSS Settings 43
4.5. FIRMWARE UPDATE 43

5. ME310G1 TLB INTERFACE FOR EVB 44
5.1. Description 44
5.2. Physical Dimensions 44
5.3. Interface Details 45
5.3.1. Connectors Position 45
5.3.2. Jumpers Setting 47
5.3.3. PL101, PL102, PL103 – EVB Connection 48
5.3.4. Antenna Connectors 50
5.3.5. STAT LED 51
5.3.6. Expansion Connectors 52

6. SAFETY RECOMMENDATIONS 55
6.1. READ CAREFULLY 55
6.2. Disposal of this product in the European Union 56
6.3. Disposal of this product in other countries outside the European Union 56

7. REFERENCE TABLE OF RF BANDS CHARACTERISTICS 57

8. ACRONYMS 58

ANNEX 1 GE310-GNSS EVK2 INTERFACE SCHEMATIC 60

ANNEX 2 GE310-GNSS EVK2 INTERFACE COMPONENTS LAYOUT 64

ANNEX 3 GE310-GNSS TLB INTERFACE SCHEMATICS 67

ANNEX 4 GE310-GNSS TLB INTERFACE COMPONENTS LAYOUT 72

ANNEX 5 ME310G1 TLB INTERFACE SCHEMATICS 75

ANNEX 6 ME310G1 TLB INTERFACE COMPONENTS LAYOUT..... 80

9. DOCUMENT HISTORY 82

1. INTRODUCTION

1.1. Scope

The Aim of this document is the handling description of the Interfaces for the products based on xE310 form factor.

1.2. Audience

This document is intended for Telit customers, especially system integrators, about to implement their applications using the Telit module.

1.3. Contact Information, Support

For general contact, technical support services, technical questions and report documentation errors contact Telit Technical Support at:

- TS-EMEA@telit.com
- TS-AMERICAS@telit.com
- TS-APAC@telit.com
- TS-SRD@telit.com

Alternatively, use:

http://www.telit.com/support

For detailed information about where you can buy the Telit modules or for recommendations on accessories and components visit:

http://www.telit.com

Our aim is to make this guide as helpful as possible. Keep us informed of your comments and suggestions for improvements.

Telit appreciates feedback from the users of our information.

1.4. Text Conventions

Danger – This information MUST be followed or catastrophic equipment failure or bodily injury may occur.

Caution or Warning – Alerts the user to important points about integrating the module, if these points are not followed, the module and end user equipment may fail or malfunction.

Tip or Information – Provides advice and suggestions that may be useful when integrating the module.

All dates are in ISO 8601 format, i.e. YYYY-MM-DD.

1.5. Related Documents

- Telit EVK2 User Guide, 1VV0300704
- Telit Evaluation Board (EVB) User Guide, 1VV0301249
- GE310-GNSS HW Design Guide, 1VV0301564
- GE310-GNSS AT Commands Reference Guide, 80598ST10945A
- ME310G1 HW Design Guide, 1VV0301588
- ME310G1 AT Commands Reference Guide, 80617ST10991A

2. OVERVIEW

The Telit Evaluation Kit (EVK2) provides a robust, future-proof and flexible environment to streamline all application development based on Telit GSM/GPRS, UMTS/HSPA, CDMA 1x/EV-DO, and LTE module families, significantly reducing time-to-market.

The EVK2 kit includes a motherboard where to connect the Interface board of a Telit module.

This concept allows the EVK2 to be used across various form factors and product generations, both present and future.

The motherboard includes the basic interfaces such as power input, SIM card holder, audio monitor outputs, RS-232, and USB; as well as a Reset button and power switch.

The circuit implemented in the EVK2 motherboard is based on the recommended reference design for the module's peripheral components and I/O connections.

Adapter boards are available for all the different module families.

The interface boards convert the module connection technology (board-to-board or BGA soldering) into a PTH pin connector. The part of the basic interfaces is served by the motherboard, whereas specific interfaces according to the type of the module (antenna, general purpose inputs/outputs GPIO, ADC/DAC, UART) are available on the adapter board to connect it to the user applications, extension boards, measurements equipment or other tools.

All connections are made through 2x40 contacts connectors.

It is possible to use these Interface Boards also in stand-alone mode, inserting the “not mounted” components (related to RESET BUTTON, ON BUTTON, SIM HOLDER and STATUS LED functions) plus the use of an external level translator circuit.

This document is describing the available Adapter Boards for the modules based on the xE866 form factor.

NOTICE:

The information presented in this document is believed to be accurate and reliable. However, no responsibility is assumed by Telit Communications S.p.A. for its use, nor any infringement of patents or other rights of third parties which may result from its use. No license is granted by implication or otherwise under any patent rights of Telit Communications S.p.A. other than for circuitry embodied in Telit products. This document is subject to change without notice.

---

3. GE310 INTERFACE FOR EVK2

3.1. Description

This board allows easily interfacing the GE310 modules with the EVK2 and testing their functionalities.

3.2. Physical Dimensions

Item	Value
Length	100 mm
Width	107 mm
Height	25 mm

3.3. Interface Details

3.3.1. Connectors Position

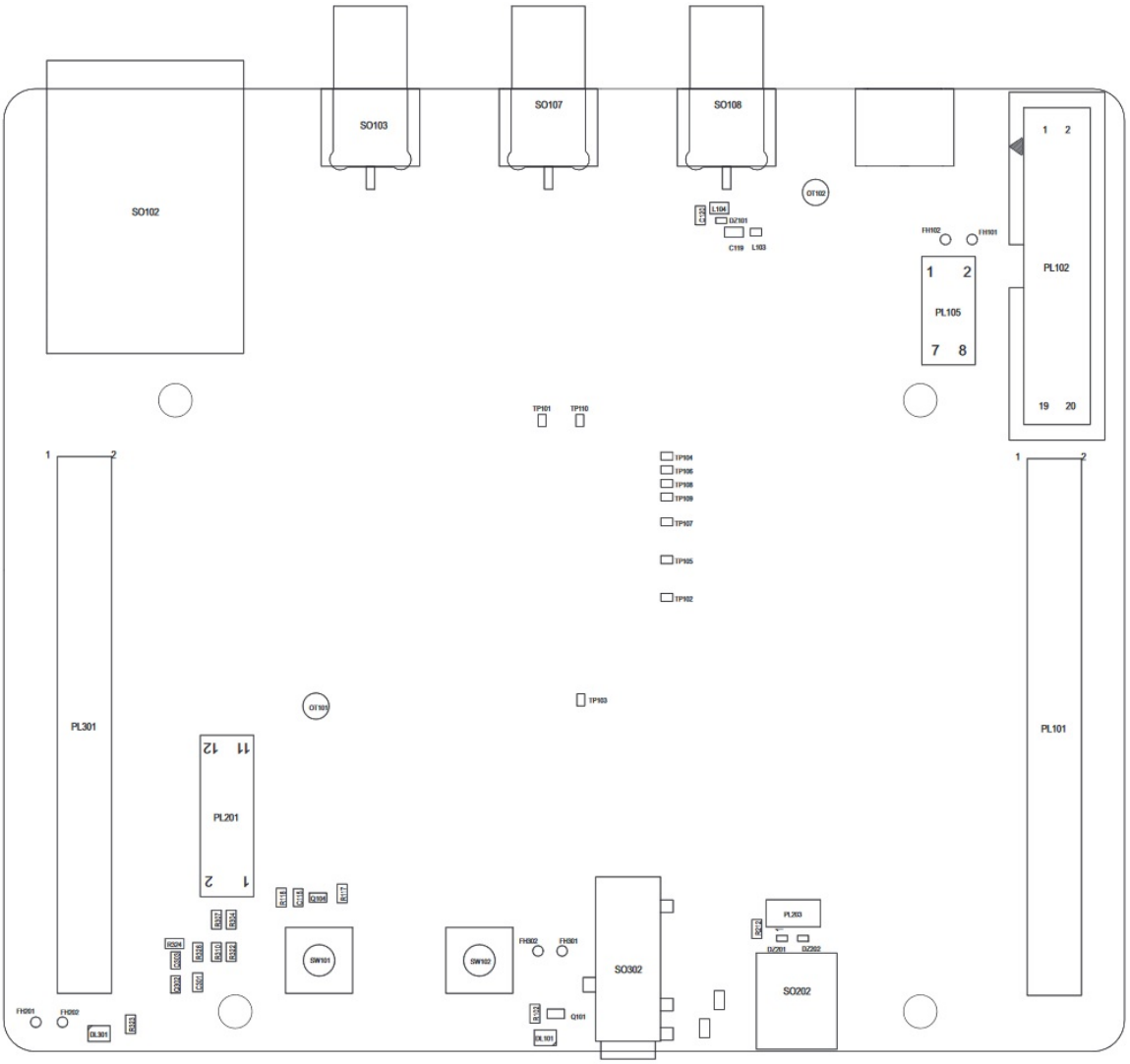

TOP SIDE

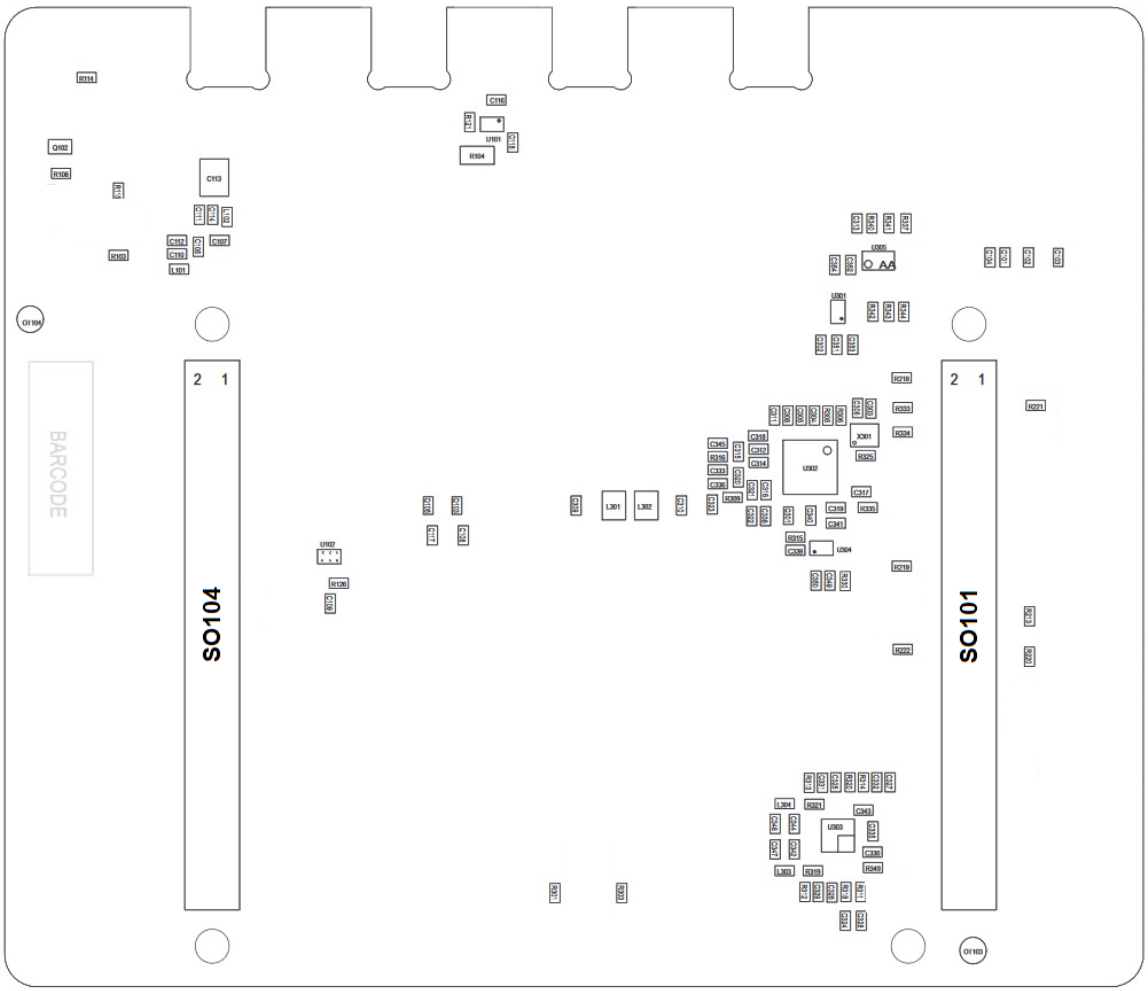

BOTTOM SIDE

3.3.2. Jumpers Setting

The following picture shows the jumpers placement and their default settings.

Details in the following paragraphs.

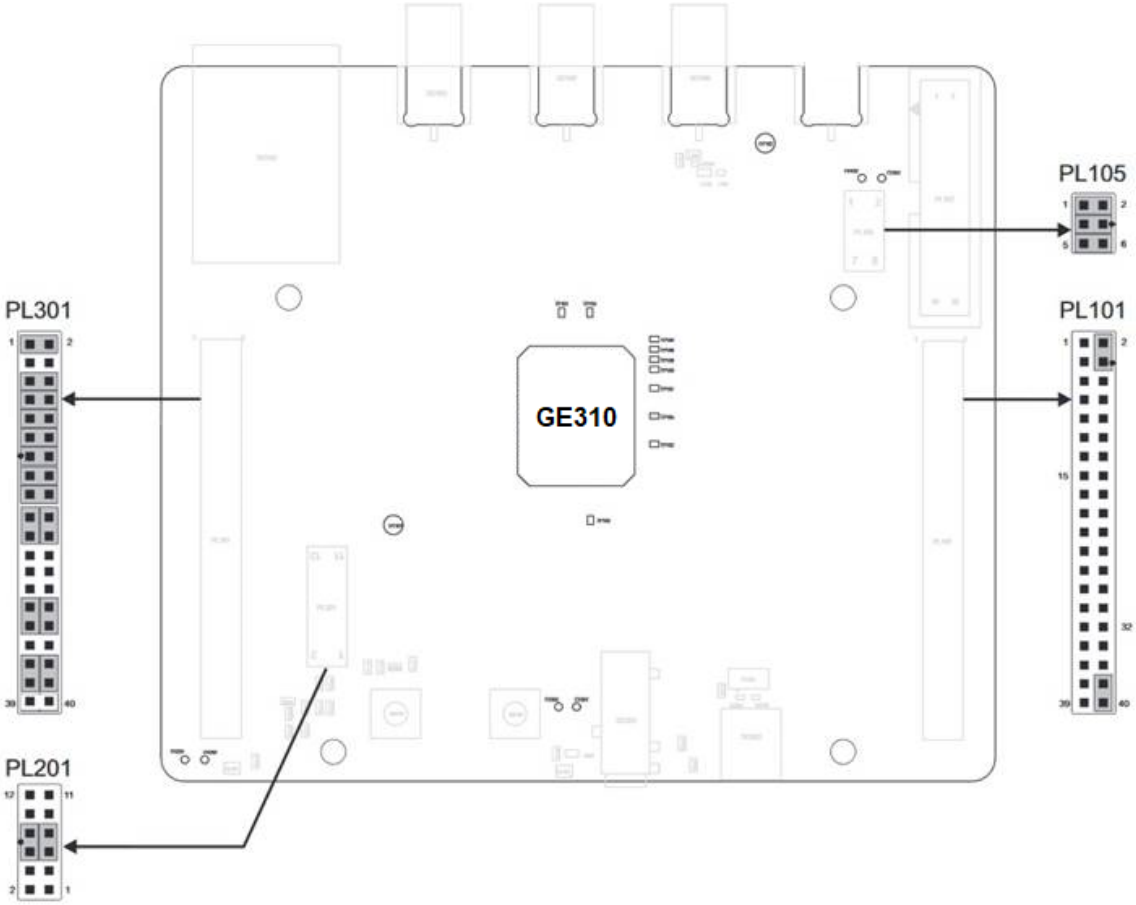

3.3.3. SO101 & SO104 – EVK2 Connection

The connections between the Interface and the EVK2 is done through two 2x40 pin female connectors present on the bottom (SO101 and SO104). Theirs pin functions are listed in the following tables:

SO101

Pin	Signal	Type	Function
1	NC	-	Do not connect
2	TX_Aux	Digital Output	to RS232 or USB level translators
3	RX_Aux	Digital Input	from RS232 or USB level translators
4	I2C_SDA	Digital	
5	GND	DC Supply	Power
6	I2C_SDA	Digital	
7	NC	-	Do not connect
8	NC	-	Do not connect
9	NC	-	Do not connect
10	NC	-	Do not connect
11	GND	DC Supply	Power
12	GND	DC Supply	Power
13	GND	DC Supply	Power
14	GND	DC Supply	Power
15	NC	-	Do not connect
16	C104/RXD0	Digital Output	to RS232 or USB level translator
17	C103/TXD0	Digital Input	from RS232 or USB level translator
18	NC	-	Do not connect

19	GND	DC voltage	Power
20	NC	-	Do not connect
21	C105/RTS0	Digital Input	from RS232 or USB level translator
22	C106/CTS0	Digital Output	to RS232 or USB level translator
23	NC	-	Do not connect
24	NC	-	Do not connect
25	GND	DC voltage	Power
26	GND	DC voltage	Power
27	GND	DC voltage	Power
28	GND	DC voltage	Power
29	EAR_HF+	AC Out Voltage	Audio
30	EAR_MT-	AC Out Voltage	Audio
31	EAR_HF-	AC Out Voltage	Audio
32	EAR_MT+	AC Out Voltage	Audio
33	NC	-	Do not connect
34	MIC_HF-	AC In Voltage	Audio
35	MIC_MT+	AC In Voltage	Audio
36	MIC_HF+	AC In Voltage	Audio
37	MIC_MT-	AC In Voltage	Audio
38	GND	DC voltage	Power
39	GND	DC voltage	Power
40	GND	DC voltage	Power

SO104

Pin	Signal	Type	Function
1	VBATT_PA	DC Supply	Power
2	VBATT_PA	DC Supply	Power
3	VBATT_AUX	DC Supply	Power
4	VBATT	DC Supply	Power
5	GND	DC Supply	Power
6	GND	DC Supply	Power
7	GND	DC Supply	Power
8	GND	DC Supply	Power
9	NC	-	Do not connect
10	NC	-	Do not connect
11	GND	DC Supply	Power
12	GND	DC Supply	Power
13	GND	DC Supply	Power
14	GND	DC Supply	Power
15	RESERVED	-	
16	NC	-	Do not connect
17	RESET*	Digital Signal	Module Reset
18	NC	-	Do not connect
19	NC	-	Do not connect
20	NC	-	Do not connect

21	STAT_LED	Digital Signal	Status Indicator LED
22	NC	-	Do not connect
23	NC	-	Do not connect
24	NC	-	Do not connect
25	GND	DC Supply	Power
26	GND	DC Supply	Power
27	GND	DC Supply	Power
28	GND	DC Supply	Power
29	NC	-	Do not connect
30	NC	-	Do not connect
31	SIMIO	Digital Signal	SIM Data I/O
32	SIMCLK	Digital Signal	SIM Clock
33	SIMRST	Digital Signal	SIM Reset
34	SIMVCC	DC voltage	SIM Power
35	SIMIN	Digital Signal	SIM Presence detector
36	NC	-	Do not connect
37	NC	-	Do not connect
38	NC	-	Do not connect
39	GND	DC Supply	Power
40	GND	DC Supply	Power

3.3.4. Antenna Connectors

3.3.4.1. SO103 – MAIN Antenna Connector

The MAIN 2G Antenna is available on SO103 and it is a female SMA connector.

A 2G compatible antenna (Refer to the product's HW Design guide) must be connected to SO103.

3.3.4.2. SO107 – Bluetooth Antenna Connector

The Bluetooth Antenna is available on SO107 and it is a female SMA connector.

A BT compatible antenna (Refer to the product's HW Design guide) has to be used.

3.3.4.3. SO108 – GNSS Antenna Connector

The GNSS Antenna is available on SO108 and it is a female SMA connector.

A GNSS compatible antenna (Refer to the product's HW Design guide) has to be used.

3.3.5. PL105 - Power Supply Setting

The PL105 connector is permitting to configure how to supply the module.

The Interface is designed to supply and filter the two Module's inputs VBATT and VBATT_PA and separately the rest of circuits of the Interface (VBATT_AUX)

The connector is provided by 3 Jumpers (Mounted by default) that permits to:

- Select if to supply the module from EVK2 or from an external source
- Insert a Power consumption Meter in series to the supply

The connector carries the following signals:

PL105

Pin	Signal	Function
1	VBATT_PA (Module)	Module's VBATT_PA signal
2	VBATT_PA (EVK2)	VBATT_PA from the EVK2
3	VBATT (Module)	Module's VBATT signal
4	VBATT (EVK2)	VBATT from the EVK2
5	VBATT_AUX (Interface)	Supply input for the Interface circuits (except the module)
6	VBATT_AUX (EVK2)	VBATT_AUX from the EVK2 usable to supply the Interface's circuit.

3.3.6. SIM Holder and SIM Detection

The Interface is provided by a SIM Holder (SO102).

The SIM holder lines are in parallel to the lines connected to the SIM Holder on EVK2 so it is not allowed to have a SIM in both holders.

Due to the fact the product is not provided by a dedicated pin for the HW SIM Presence detection, it is possible to select one GPIO to be used for this function.

On the interface it has been considered to have the possibility to use the GPIO 4 adding a Jumper on PL301.

On PL301 the lines dedicated to this activity are:

Pin	Signal	Function
5	GPIO_04	GPIO_04 on module
6	SIM_IN	SIMIN Line from SIM Holder SO102

3.3.7. RESET

The Interface is provided by a button that permits to RESET the module.

Please refer to the Module's HW user guide for its use and behaviour.

3.3.8. STAT LED

The Interface is provided by a LED controlled by the STAT LED line of the module.

Please refer to the Module's HW user guide for its use and behaviour.

3.3.9. Expansion Connectors

3.3.9.1. PL101

The connector carries the following signals:

Pin	Signal	Function
1	VBATT_AUX	Interface Power supply
2	GNSS_ON	GNSS_ON signal
3	NC	
4	GPIO_06	General Purpose IO #6
5	GPIO_05	General Purpose IO #5
6	NC	
7	GPIO_04	General Purpose IO #4
8	GPIO_03	General Purpose IO #3
9	GPIO_02	General Purpose IO #2
10	GPIO_01	General Purpose IO #1
11	Reserved	Reserved
12	GND	Ground
13	Reserved	Reserved
14	NC	
15	Reserved	Reserved
16	Reserved	Reserved
17	Reserved	Reserved
18	Reserved	Reserved
19	ALARM	ALARM output from Module

20	1PPS	1PPS output from Module
21	Reserved	Reserved
22	Reserved	Reserved
23	VAUX/PWRMON	VAUX/PWRMON from module
24	DAC	Digital to Analog converter output from module
25	Reserved	Reserved
26	ADC	Analog to Digital converter
27	ON_OFF	Module's ON_OFF line
28	NC	
29	GPIO_06	GPIO
30	GPIO_05	GPIO
31	GND	Ground
32	Reserved	Reserved
33	Reserved	Reserved
34	Reserved	Reserved
35	Reserved	Reserved
36	Reserved	Reserved
37	NC	
38	GNSS_LNA_EN	Module's output line to control the external GNSS LNA Enable
39	VBATT_AUX	VBATT supply for Interface
40	LNA SUPPLY EN	Enable line for the GNSS LNA supply

3.3.9.2. PL201

The connector carries the following signals:

Pin	Signal	Function
1	C104/RXD1	SECONDARY UART RX (Output from Module)
2	C103/TXD1	SECONDARY UART RX (Input to Module)
3	TX_TRACE_EVK2	AUX UART RX Input to Level Adapter)
4	RX_TRACE_EVK2	AUX UART RX (Output from Level Adapter)
5	TX_GNSS	GNSS UART TX
6	RX_GNSS	GNSS UART RX
7	C103/TXD1	SECONDARY UART RX (Input to Module)
8	C104/RXD1	SECONDARY UART RX (Output from Module)
9	NC	
10	NC	
11	NC	
12	NC	

There are two Jumpers on this connector that permit to select the following:

- To connect the Secondary UART to the GNSS UART (Hosted configuration) (5-7 and 6-8)
- To connect the Secondary UART to the EVK2 level translators (1-3 and 2-4)
- To connect the GNSS UART to the EVK2 level translators (5-7 and 6-8)

In case is needed to connect an external application to the AUX UART , GNSS UART or simply to isolate them from the rest of the circuitry it is only needed to remove the two jumpers.

3.3.10. Audio Section and Settings

The GE310-GNSS is provided by an Analog Audio line (MIC and SPKR)

3.3.10.1. Audio Settings

The Interface Board is provided by a set of possible Audio inputs to interface the Audio circuitry of GE310

Its configuration could be set using the Jumpers on PL301.

You could refer to the “PL301 - Audio Settings” paragraph for the details.

3.3.10.1.1. MIC/SPK connector

A MIC/SPK headset could be connected using the SO301 connector (Jack 3.5mm) where the contacts are described in the following Image:

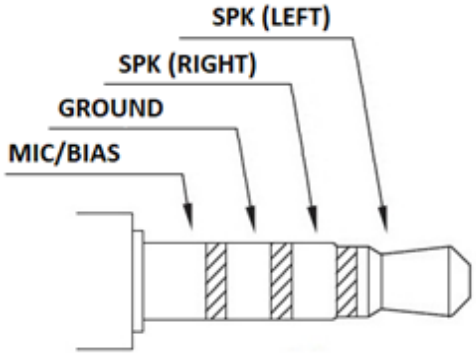

3.3.10.2. PL301 – Audio Settings

The Audio Configuration could be done using the Jumpers on PL301.

3.3.10.2.1. Audio Path Settings

Audio Uplink Setting on PL301

Jumpers on Pin	Signal	Description
19-21 **20-22**	MIC- (Modem) MIC+ (Modem)	From SO301 to Module
25-27 **26-28**	MIC- (Modem) MIC+ (Modem)	From SO301 to Module

Audio DOWNLINK Setting on PL301

Jumpers on Pin	Signal	Description
29-31 **30-32**	SPK+ (Modem)	From Module to SO301
35-37 **36-38**	SPK- (Modem)	From Module to SO301

3.4. GNSS Settings

The GE310-GNSS module is provided by a GNSS receiver.

The interface is permitting to connect and supply an external active antenna and also to set the module in the different working modes.

3.4.1. GNSS Signals

The GE310 is including the following signals usable with the GNSS section:

Pin	Signal	I/O	Function	Type	Comment
Asynchronous Serial Port (USIF1)					
Y12	TXD1	I	Serial data input (TXD) from DTE	CMOS 2.8V	
AA11	RXD1	O	Serial data output (RXD) to DTE	CMOS 2.8V	
GNSS Serial Port					
Y10	GNSS_NMEA_TX	O	GNSS UART UART (TX Data to DTE)	CMOS 2.8V	
AA9	GNSS_NMEA_RX	I	GNSS UART (RX Data from DTE)	CMOS 2.8V	
DIGITAL IO					
D13	IO6	I/O	Configurable GPIO06	CMOS 2.8V	Usable to control GNSS_ON
GNSS Control Signals					
H18	GNSS_LNA_EN	O	GNSS external LNA enable	CMOS 2.8V	Used to enable the external LNA supply
J16	GNSS_ON	I	GNSS Receiver Enable	CMOS 2.8V	
G16	GNSS_PPS	O	1 Pulse per Second	CMOS 2.8V	
RF Section					
E19	GNSS ANTENNA	I	GNSS Antenna	RF	

3.4.2. Hosted GNSS Settings

As described in HW User Guide the GE310-GNSS module permits to use the GNSS section as host for the 2G section or as a separated device.

The Hosted configuration could be set in the following way:

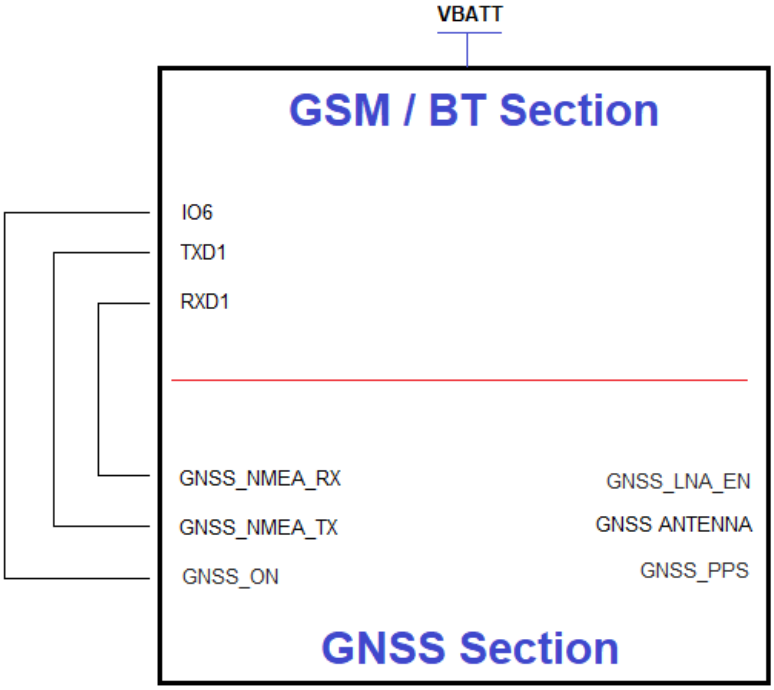

3.5. Interface Stand-alone Use

The GE310 Interface could be used in Stand alone (without the EVK2 mainboard) with the following remarks:

- The Power supply could be provided connecting a Power supply to SO104 or PL105 (removing the Jumpers)
- The Power supply level has to be carefully verified in the Module's HW User Guide
- The SIM could be inserted in the SO102 Holder
- The communication with the module through the UART requires the use of a level adapter between the PC and the Interface (the lines are available on SO101 but please be aware that the signals on that connector have been adapted to the 2.8V logic levels of EVK2)
- The Audio section could be used accessing directly to the Analog lines (see above chapters for pinout) or through the codec using SO301 and SO302
- The RESET line could be controlled using the SW101 Button
- The STAT LED line is present on the Interface (DL101)
- The Antenna could be connected on the related SMA connectors (Ref to Module's HW User Guide for the correct model)

3.6. FIRMWARE UPDATE

You can update the Telit Module firmware through the serial port.

In case the GNSS section needs a SW upgrade this could be done setting the Interface in this way:

- PL101: Jumper Between Pin 2 and Pin 4.
- PL201: Jumper Between Pin 5 and Pin 7 and Jumper between Pin 6 and Pin 8.

Please refer to the GE310 HW Design Guide Documentation for details.

Please refer to **Annex 1** for interface Electric Diagrams and **Annex 2** for components layout

4. GE310 TLB INTERFACE FOR EVB

4.1. Description

This board allows easily interfacing the GE310 modules with the Telit Evaluation Board (EVB) and testing their functionalities.

4.2. Physical Dimensions

Item	Value
Length	100 mm
Width	70 mm
Height	25 mm

4.3. Interface Details

4.3.1. Connectors Position

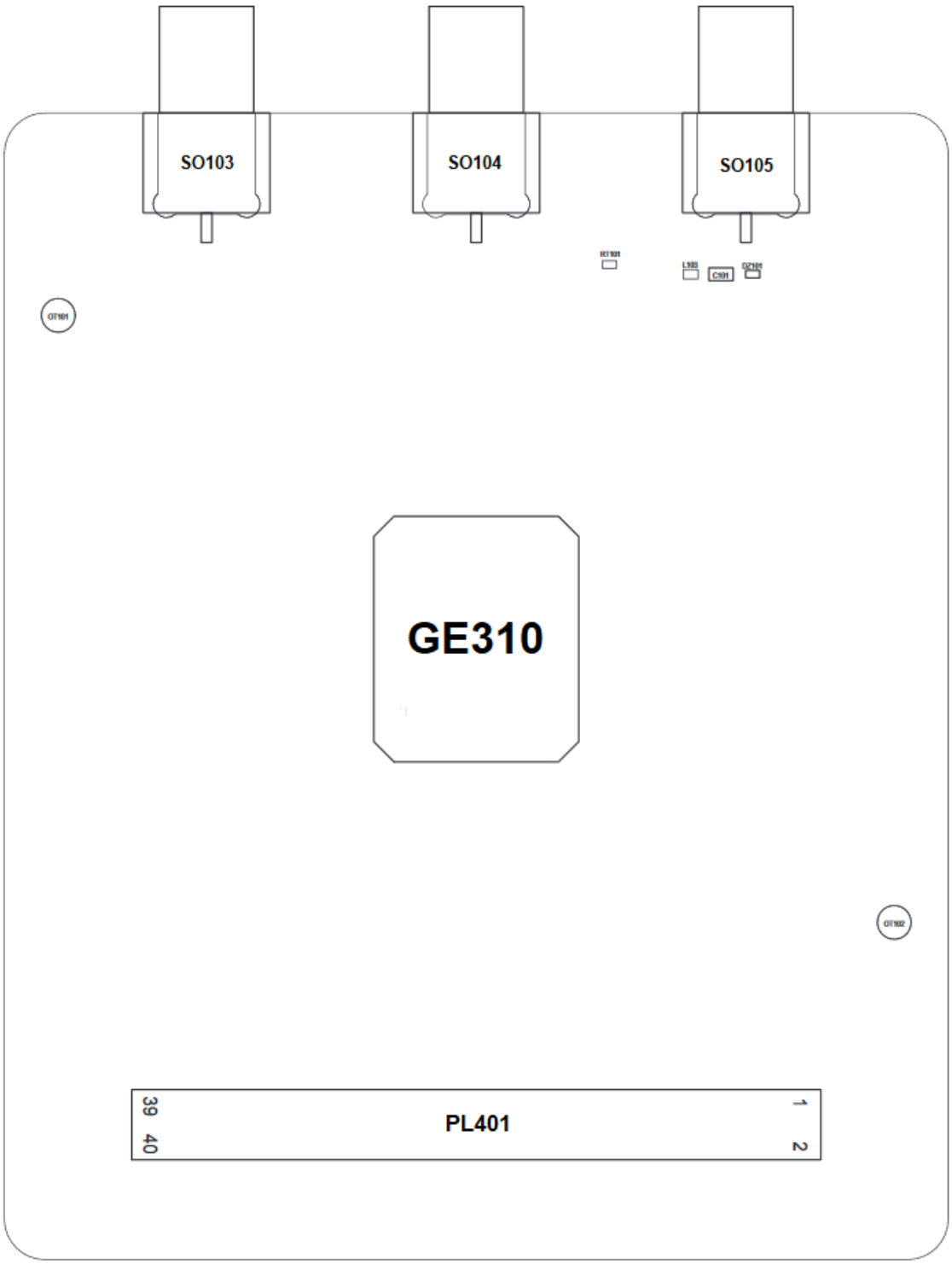

TOP SIDE

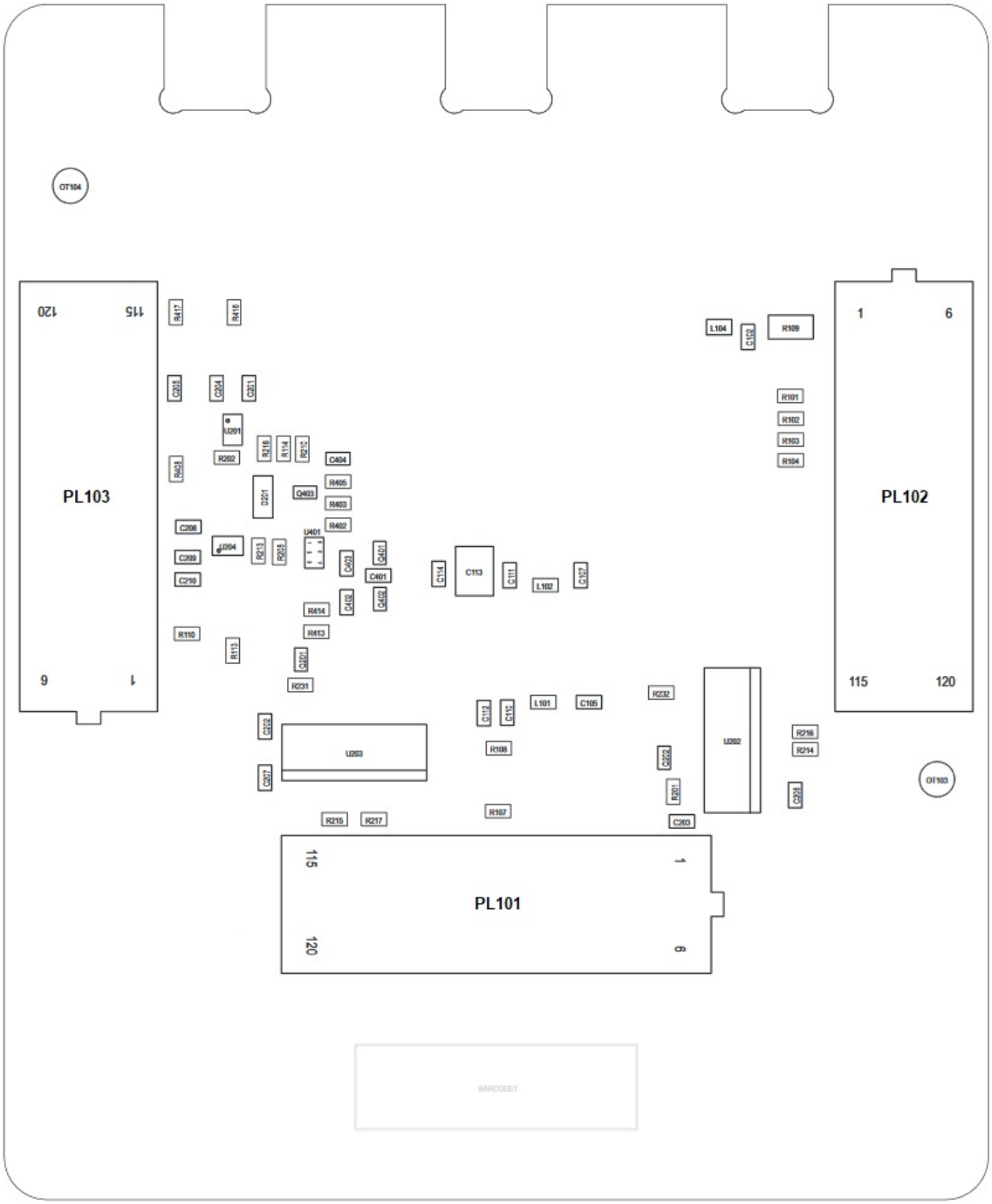

BOTTOM SIDE

4.3.2. Jumpers Setting

The following picture shows the jumpers placement and their default settings.

Details in the following paragraphs.

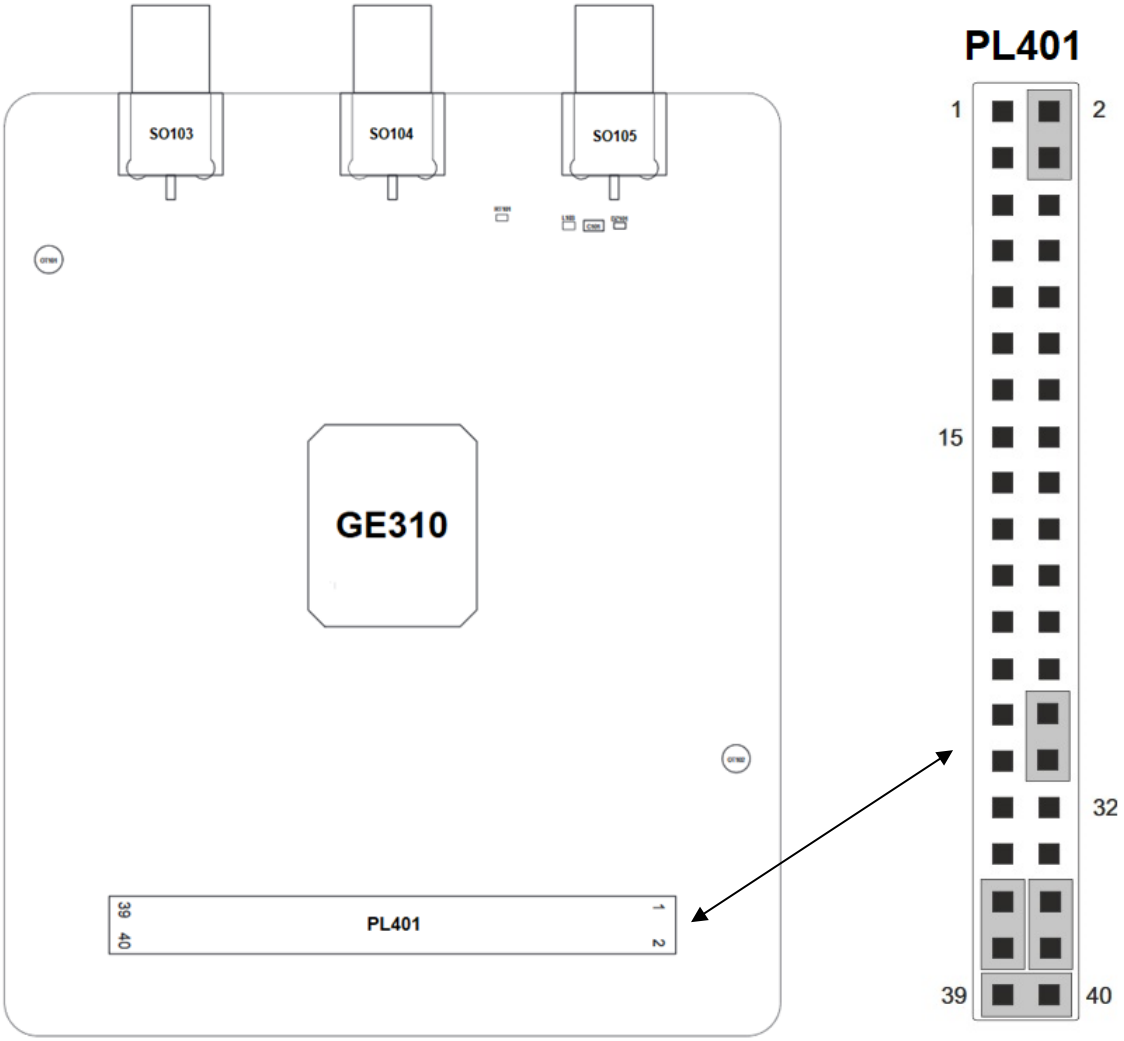

4.3.3. PL101, PL102, PL103 – EVB Connection

The connections between the Interface and the EVB is done through three 6x20 pin connectors present on the bottom (PL101, PL102 and PL103).

The connector is a Semtec SEAM Series - .050" (1.27 mm) High Speed/High Density Open Pin Field with p/n is SEAM-20-03.5-L-06-2-A-K-TR

Theirs pin functions are listed in the following tables:

PL101											
1	GND	2	GND	3	NC	4	NC	5	GND	6	NC
7	NC	8	GND	9	Reserved	10	GPIO_06	11	NC	12	NC
13	NC	14	GND	15	GPIO_05	16	Reserved	17	NC	18	GND
19	GND	20	GND	21	VREG_MSME	22	VREG_MSME	23	GND	24	NC
25	NC	26	GND	27	NC	28	NC	29	NC	30	NC
31	NC	32	GND	33	NC	34	Reserved	35	NC	36	GND
37	GND	38	NC	39	NC	40	GPIO_04	41	GND	42	NC
43	Reserved	44	GPIO_02	45	GPIO_03	46	Reserved	47	NC	48	NC
49	VAUX/PWRMON	50	VAUX/PWRMON	51	NC	52	Reserved	53	NC	54	NC
55	NC	56	NC	57	GPIO_01	58	NC	59	NC	60	NC
61	NC	62	NC	63	NC	64	NC	65	NC	66	NC
67	Reserved	68	Reserved	69	Reserved	70	Reserved	71	NC	72	NC
73	Reserved	74	Reserved	75	Reserved	76	Reserved	77	NC	78	NC
79	GND	80	GND	81	Reserved	82	Reserved	83	NC	84	NC
85	NC	86	NC	87	NC	88	NC	89	C104/RXD1	90	NC
91	NC	92	NC	93	NC	94	NC	95	C103/TXD1	96	NC
97	NC	98	NC	99	NC	100	Reserved	101	NC	102	NC
103	Reserved	104	Reserved	105	Reserved	106	C105/RTS0	107	NC	108	NC
109	C104/RXD0	110	Reserved	111	C103/TXD0	112	C106/CTS0	113	Reserved	114	NC
115	NC	116	NC	117	NC	118	NC	119	NC	120	NC

PL102											
1	GPS_LNA_BIAS	2	GND	3	GPS_LNA_EN	4	NC	5	GND	6	NC
7	GND	8	GND	9	GND	10	GND	11	GND	12	NC
13	NC	14	NC	15	GND	16	NC	17	NC	18	NC
19	GND	20	GND	21	GND	22	GND	23	GND	24	GND
25	NC	26	NC	27	GND	28	NC	29	NC	30	GND
31	NC	32	NC	33	NC	34	NC	35	NC	36	NC
37	GND	38	GND	39	NC	40	NC	41	GND	42	GND
43	NC	44	GND	45	GND	46	GND	47	GND	48	GND
49	NC	50	GND	51	GND	52	Reserved	53	Reserved	54	ADC_IN1
55	NC	56	NC	57	NC	58	NC	59	NC	60	NC
61	Reserved	62	Reserved	63	Reserved	64	Reserved	65	Reserved	66	GND
67	GND	68	GND	69	GND	70	GND	71	GND	72	NC
73	GND	74	GND	75	GND	76	GND	77	SIMVCC1	78	SIMVCC1
79	Reserved	80	NC	81	SIMCLK1	82	SIMIN1	83	SIMIO1	84	SIMRST1
85	NC	86	Reserved	87	NC	88	NC	89	NC	90	NC
91	Reserved	92	Reserved	93	NC	94	NC	95	NC	96	NC
97	GND	98	GND	99	NC	100	NC	101	NC	102	NC
103	Reserved	104	GND	105	NC	106	NC	107	NC	108	NC
109	Reserved	110	GND	111	NC	112	NC	113	NC	114	NC
115	GND	116	GND	117	NC	118	NC	119	NC	120	NC

PL103											
1	VBATT	2	VBATT	3	VBATT	4	VBATT_PA	5	VBATT_PA	6	VBATT_PA
7	VBATT	8	VBATT	9	VBATT	10	VBATT_PA	11	VBATT_PA	12	VBATT_PA
13	VBATT	14	VBATT	15	VBATT	16	VBATT_PA	17	VBATT_PA	18	VBATT_PA
19	NC	20	NC	21	NC	22	VBATT_PA	23	VBATT_PA	24	VBATT_PA
25	NC	26	NC	27	NC	28	NC	29	NC	30	NC
31	NC	32	NC	33	NC	34	NC	35	NC	36	NC
37	NC	38	NC	39	NC	40	NC	41	NC	42	NC
43	NC	44	NC	45	NC	46	NC	47	NC	48	NC
49	NC	50	NC	51	NC	52	NC	53	NC	54	NC
55	NC	56	NC	57	NC	58	NC	59	NC	60	NC
61	NC	62	NC	63	NC	64	NC	65	NC	66	NC
67	NC	68	NC	69	NC	70	NC	71	NC	72	NC
73	NC	74	NC	75	NC	76	NC	77	NC	78	NC
79	GND	80	GND	81	GND	82	GND	83	GND	84	GND
85	GND	86	GND	87	GND	88	GND	89	GND	90	GND
91	RESET	92	ON_OFF	93	STAT_LED	94	NC	95	NC	96	NC
97	GND	98	GND	99	GND	100	GND	101		102	NC
103	NC	104	NC	105	NC	106	GND	107		108	NC
109	GND	110	GND	111	GND	112	GND	113	Reserved	114	Reserved
115	Reserved	116	Reserved	117	Reserved	118	Reserved	119	Reserved	120	Reserved

4.3.4. Antenna Connectors

4.3.4.1. SO103 – MAIN Antenna Connector

The MAIN 2G Antenna is available on SO103 and it is a female SMA connector.

A 2G compatible antenna (Refer to the product's HW Design guide) must be connected to SO103.

4.3.4.2. SO104 – Bluetooth Antenna Connector

The Bluetooth Antenna is available on SO104 and it is a female SMA connector.

A BT compatible antenna (Refer to the product's HW Design guide) has to be used.

4.3.4.3. SO105 – GNSS Antenna Connector

The GNSS Antenna is available on SO105 and it is a female SMA connector.

A GNSS compatible antenna (Refer to the product's HW Design guide) has to be used.

4.3.5. SIM Holder and SIM Detection

The Interface is using the SIM Holder available on the EVB mainboard.

Due to the fact the product is not provided by a dedicated pin for the HW SIM Presence detection, it is possible to select one GPIO to be used for this function.

On the interface it has been considered to have the possibility to use the GPIO_05 adding a Jumper on PL401.

On PL401 the lines dedicated to this activity are:

Pin	Signal	Function
39	GPIO_04	GPIO_04 on module
40	SIM_IN	SIMIN Line from EVB SIM Holder

4.3.6. RESET

The module could be reset using the related button on EVB mainboard.

4.3.7. STAT LED

The EVB Interface is provided by a LED controlled by the STAT LED line of the module.

Please refer to the Module's HW user guide for its use and behaviour.

4.3.8. Expansion Connectors

4.3.8.1. PL401

The connector carries the following signals:

Pin	Signal	Function
1	VBATT_AUX	Interface Power supply
2	GNSS_ON	GNSS_ON signal
3	NC	
4	GPIO_06	General Purpose IO #6
5	GPIO_05	General Purpose IO #5
6	NC	
7	GPIO_04	General Purpose IO #4
8	GPIO_03	General Purpose IO #3
9	GPIO_02	General Purpose IO #2
10	GPIO_01	General Purpose IO #1
11	Reserved	Reserved
12	GND	Ground
13	Reserved	Reserved
14	ALARM	ALARM output from Module
15	1PPS	PPS output signal from GNSS receiver
16	Reserved	Reserved
17	Reserved	Reserved
18	VAUX/PWRMON	VAUX/PWRMON from module
19	Reserved	Reserved

20	CTS0	Output for Clear to send signal (CTS) to DTE (Main UART)
21	RTS0	Input for Request to send signal (RTS) from DTE (Main UART)
22	GND	Ground
23	Reserved	Reserved
24	Reserved	Reserved
25	Reserved	Reserved
26	Reserved	Reserved
27	Reserved	Reserved
28	GNSS_LNA_EN	GNSS external LNA enable
29	VBATT_AUX	VBATT input to supply the Interface circuitery
30	GNSS_LNA_EN_EVB	GNSS LNA enable line from EVB
31	RXD0	Serial data output (RXD) to DTE (Main UART)
32	TXD0	Serial data input (TXD) from DTE (Main UART)
33	RXD1	Serial data output (RXD) to DTE (Secondary UART)
34	TXD1	Serial data input (TXD) from DTE (Secondary UART)
35	GNSS_NMEA_RX	GNSS UART (RX Data from DTE)
36	GNSS_NMEA_TX	GNSS UART UART (TX Data to DTE)
37	TXD0	Serial data input (TXD) from DTE (Main UART)
38	RXD0	Serial data output (RXD) to DTE (Main UART)
39	GPIO_04	General purpose IO 4
40	SIMIN	SIM detection line from the SIM Holder of EVB

There are two Jumpers on this connector that permit to select the following:

- To connect the Secondary UART to the GNSS UART (Hosted configuration) (35-37 and 36-38)
- To connect the Secondary UART to the EVB level translators (31-33 and 32-34)
- To connect the GNSS UART to the EVK2 level translators (33-35 and 34-36)

In case is needed to connect an external application to the AUX UART , GNSS UART or simply to isolate them from the rest of the circuitry it is only needed to remove the two jumpers.

4.4. GNSS Settings

The GE310-GNSS module is provided by a GNSS receiver.

The interface is permitting to connect and supply an external active antenna and also to set the module in the different working modes.

4.4.1. GNSS Signals

The GE310 is including the following signals usable with the GNSS section:

Pin	Signal	I/O	Function	Type	Comment
Asynchronous Serial Port (USIF1)					
Y12	TXD1	I	Serial data input (TXD) from DTE	CMOS 2.8V	
AA11	RXD1	O	Serial data output (RXD) to DTE	CMOS 2.8V	
GNSS Serial Port					
Y10	GNSS_NMEA_TX	O	GNSS UART UART (TX Data to DTE)	CMOS 2.8V	
AA9	GNSS_NMEA_RX	I	GNSS UART (RX Data from DTE)	CMOS 2.8V	
DIGITAL IO					
D13	IO6	I/O	Configurable GPIO06	CMOS 2.8V	Usable to control GNSS_ON
GNSS Control Signals					
H18	GNSS_LNA_EN	O	GNSS external LNA enable	CMOS 2.8V	Used to enable the external LNA supply
J16	GNSS_ON	I	GNSS Receiver Enable	CMOS 2.8V	
G16	GNSS_PPS	O	1 Pulse per Second	CMOS 2.8V	
RF Section					
E19	GNSS ANTENNA	I	GNSS Antenna	RF	

4.4.2. Hosted GNSS Settings

As described in HW User Guide the GE310-GNSS module permits to use the GNSS section as host for the 2G section or as a separated device.

The Hosted configuration could be set in the following way:

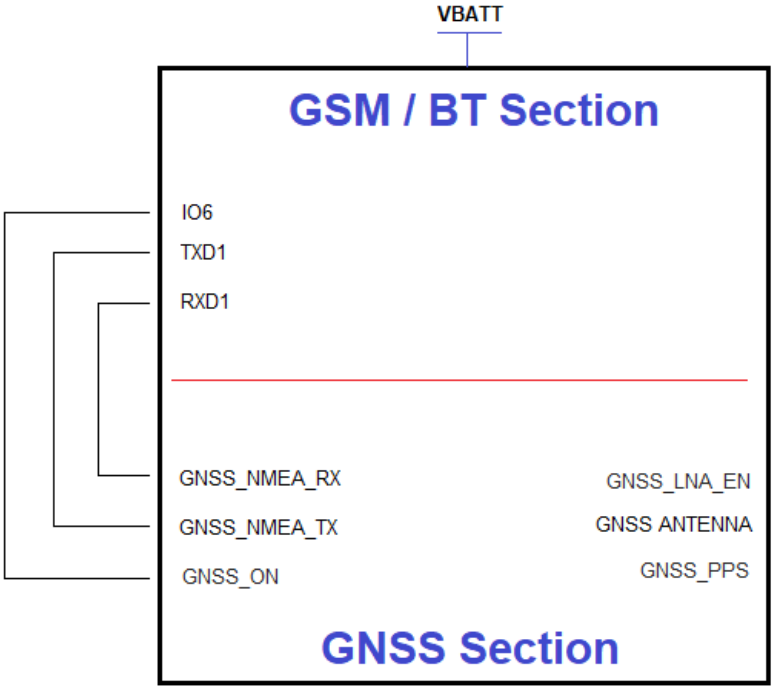

4.5. FIRMWARE UPDATE

You can update the Telit Module firmware through the serial port.

In case the GNSS section needs a SW upgrade this could be done setting the Interface in this way:

PL401: Jumper between Pin 2 and Pin 4, Jumper between Pin 35 and Pin 37 and Jumper between Pin 36 and Pin 38.

Please refer to the GE310 HW Design Guide Documentation for details.

Please refer to **Annex 3** for interface Electric Diagrams and **Annex 4** for components layout

5. ME310G1 TLB INTERFACE FOR EVB

5.1. Description

This board allows easily interfacing the GE310 modules with the Telit Evaluation Board (EVB) and testing their functionalities.

5.2. Physical Dimensions

Item	Value
Length	100 mm
Width	70 mm
Height	25 mm

5.3. Interface Details

5.3.1. Connectors Position

TOP SIDE

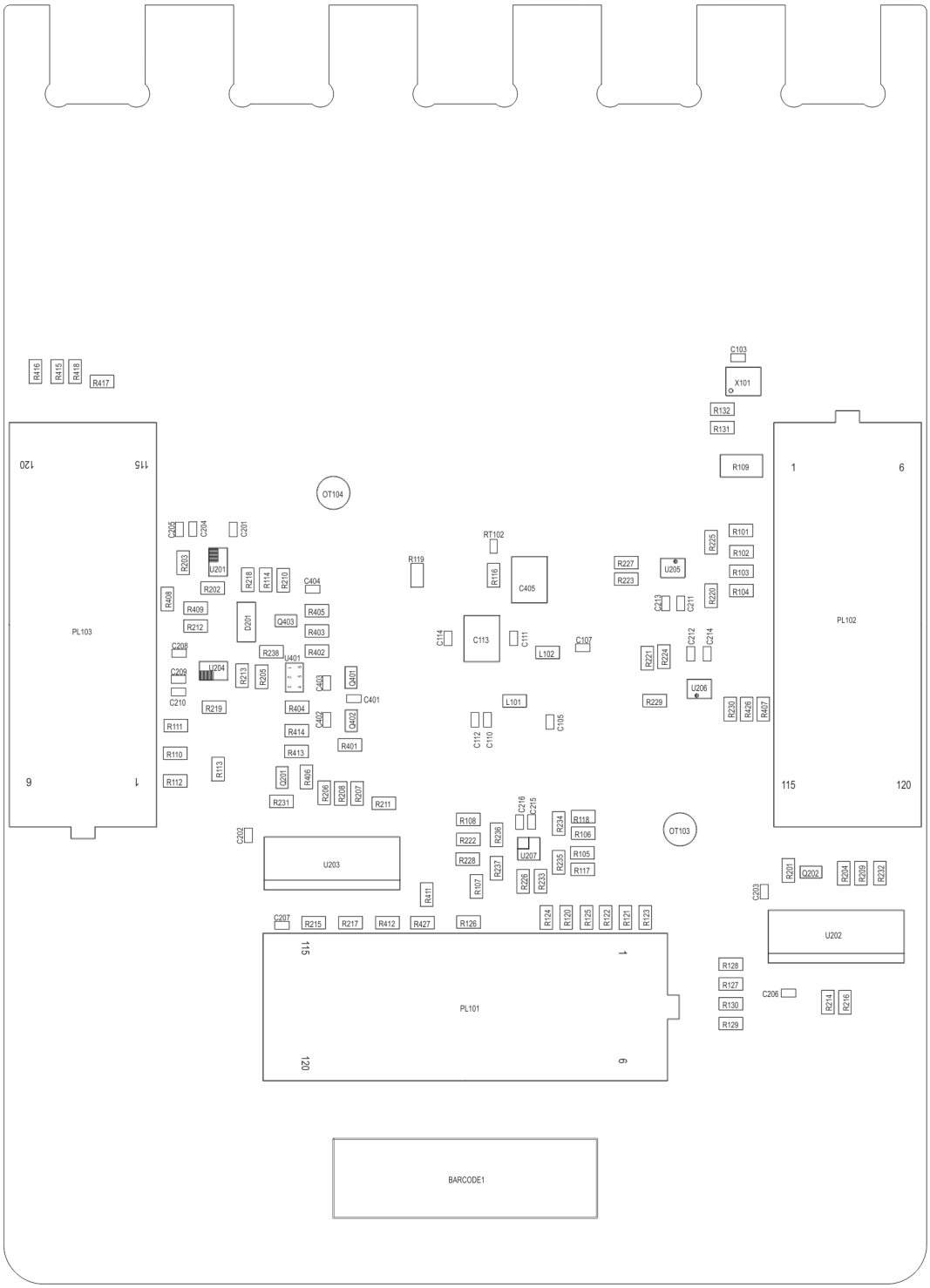
R416
R415
R418
R417
C103
X101
R132
R131
R109
PL103
120
115
1
6
OT104
C205
C204
C201
R203
U201
R202
R218
R114
R210
C404
R408
R409
R212
D201
Q403
R405
R403
R402
C208
C209
C210
U204
R213
R205
R238
U401
C403
Q401
C401
R219
R404
C402
Q402
R414
R401
R413
R111
R110
R112
R113
Q201
R406
R206
R208
R207
R211
R231
C202
U203
R119
RT102
R116
C405
C114
C113
C111
L102
C107
L101
C112
C110
C105
R227
R223
U205
R225
R101
R102
R103
R104
C213
C211
R220
C212
C214
R221
R224
U206
R229
R230
R426
R407
PL102
C216
C215
R108
R222
R228
R236
R237
R107
U207
R226
R233
R234
R118
R106
R105
R235
R117
OT103
R411
C207
R215
R217
R412
R427
R126
R124
R120
R125
R122
R121
R123
PL101
R201
Q202
R204
R209
R232
C203
U202
R128
R127
R130
R129
C206
R214
R216
BARCODE1

BOTTOM SIDE

5.3.2. Jumpers Setting

The following picture shows the jumpers placement and their default settings.

Details in the following paragraphs.

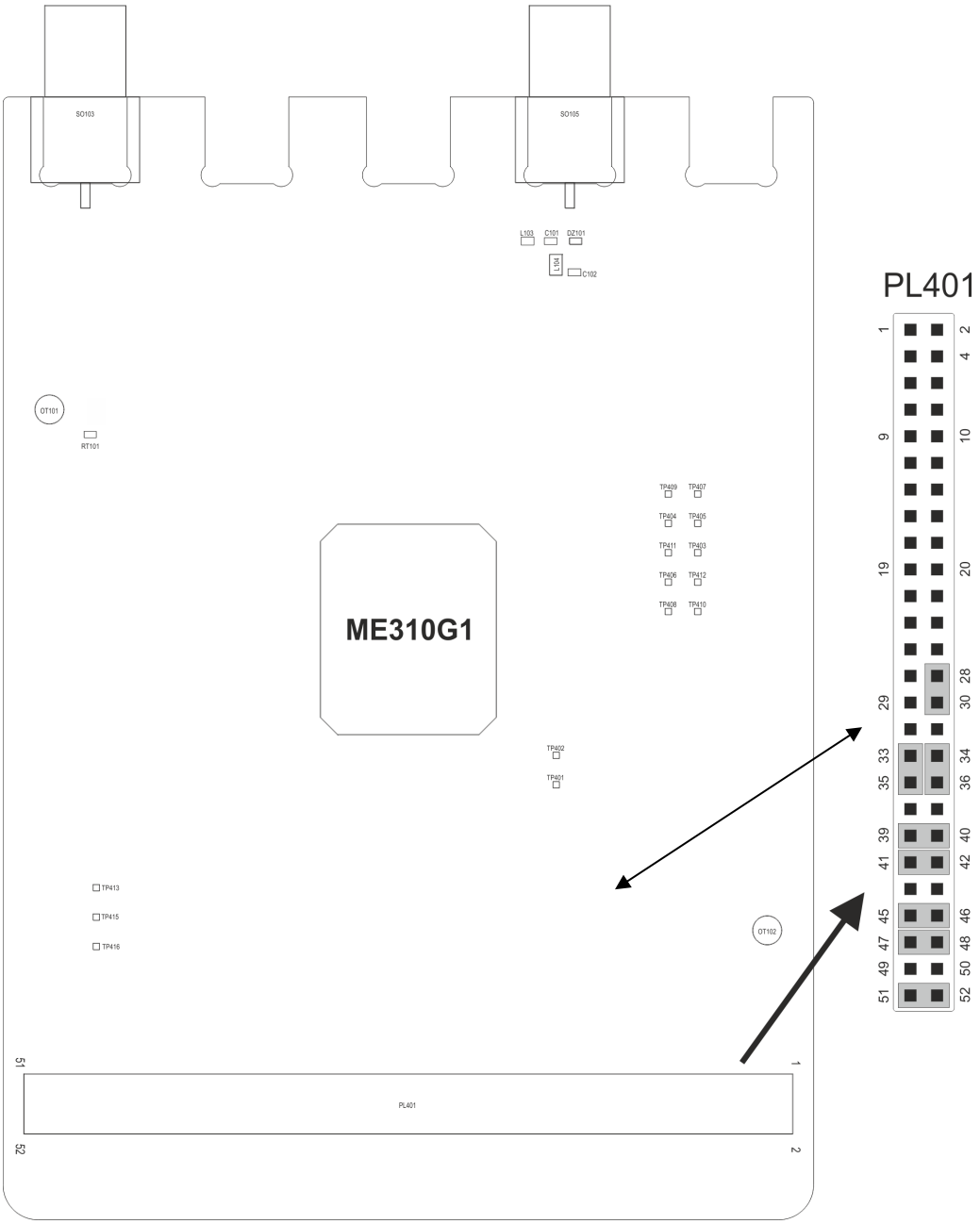

5.3.3. PL101, PL102, PL103 – EVB Connection

The connections between the Interface and the EVB is done through three 6x20 pin connectors present on the bottom (PL101, PL102 and PL103).

The connector is a Semtec SEAM Series - .050" (1.27 mm) High Speed/High Density Open Pin Field with p/n is SEAM-20-03.5-L-06-2-A-K-TR

Theirs pin functions are listed in the following tables:

PL101											
1	GND	2	GND	3	NC	4	NC	5	GND	6	NC
7	NC	8	GND	9	Reserved	10	GPIO_06	11	NC	12	NC
13	NC	14	GND	15	GPIO_05	16	Reserved	17	NC	18	GND
19	GND	20	GND	21	VREG_MSME	22	VREG_MSME	23	GND	24	NC
25	NC	26	GND	27	NC	28	NC	29	NC	30	NC
31	NC	32	GND	33	NC	34	Reserved	35	NC	36	GND
37	GND	38	NC	39	NC	40	GPIO_04	41	GND	42	NC
43	Reserved	44	GPIO_02	45	GPIO_03	46	Reserved	47	NC	48	NC
49	VAUX/PWRMON	50	PWRMON	51	NC	52	Reserved	53	NC	54	NC
55	NC	56	NC	57	GPIO_01	58	NC	59	NC	60	NC
61	NC	62	NC	63	NC	64	NC	65	NC	66	NC
67	Reserved	68	Reserved	69	Reserved	70	Reserved	71	NC	72	NC
73	Reserved	74	Reserved	75	Reserved	76	Reserved	77	NC	78	NC
79	GND	80	GND	81	Reserved	82	Reserved	83	NC	84	NC
85	NC	86	NC	87	NC	88	NC	89	C104/RXD1	90	NC
91	NC	92	NC	93	NC	94	NC	95	C103/TXD1	96	NC
97	NC	98	NC	99	NC	100	Reserved	101	NC	102	NC
103	Reserved	104	Reserved	105	Reserved	106	C105/RTS0	107	NC	108	NC
109	C104/RXD0	110	Reserved	111	C103/TXD0	112	C106/CTS0	113	Reserved	114	NC
115	NC	116	NC	117	NC	118	NC	119	NC	120	NC

PL102											
1	GPS_LNA_BIAS	2	GND	3	GPS_LNA_EN	4	NC	5	GND	6	NC
7	GND	8	GND	9	GND	10	GND	11	GND	12	NC
13	NC	14	NC	15	GND	16	NC	17	NC	18	NC
19	GND	20	GND	21	GND	22	GND	23	GND	24	GND
25	NC	26	NC	27	GND	28	NC	29	NC	30	GND
31	NC	32	NC	33	NC	34	NC	35	NC	36	NC
37	GND	38	GND	39	NC	40	NC	41	GND	42	GND
43	NC	44	GND	45	GND	46	GND	47	GND	48	GND
49	NC	50	GND	51	GND	52	Reserved	53	Reserved	54	ADC_IN1
55	NC	56	NC	57	NC	58	NC	59	NC	60	NC
61	Reserved	62	Reserved	63	Reserved	64	Reserved	65	Reserved	66	GND
67	GND	68	GND	69	GND	70	GND	71	GND	72	NC
73	GND	74	GND	75	GND	76	GND	77	SIMVCC1	78	SIMVCC1
79	Reserved	80	NC	81	SIMCLK1	82	SIMIN1	83	SIMIO1	84	SIMRST1
85	NC	86	Reserved	87	NC	88	NC	89	NC	90	NC
91	Reserved	92	Reserved	93	NC	94	NC	95	NC	96	NC
97	GND	98	GND	99	NC	100	NC	101	NC	102	NC
103	Reserved	104	GND	105	NC	106	NC	107	NC	108	NC
109	Reserved	110	GND	111	NC	112	NC	113	NC	114	NC
115	GND	116	GND	117	NC	118	NC	119	NC	120	NC

PL103											
1	VBATT	2	VBATT	3	VBATT	4	VBATT_PA	5	VBATT_PA	6	VBATT_PA
7	VBATT	8	VBATT	9	VBATT	10	VBATT_PA	11	VBATT_PA	12	VBATT_PA
13	VBATT	14	VBATT	15	VBATT	16	VBATT_PA	17	VBATT_PA	18	VBATT_PA
19	NC	20	NC	21	NC	22	VBATT_PA	23	VBATT_PA	24	VBATT_PA
25	NC	26	NC	27	NC	28	NC	29	NC	30	NC
31	NC	32	NC	33	NC	34	NC	35	NC	36	NC
37	NC	38	NC	39	NC	40	NC	41	NC	42	NC
43	NC	44	NC	45	NC	46	NC	47	NC	48	NC
49	NC	50	NC	51	NC	52	NC	53	NC	54	NC
55	NC	56	NC	57	NC	58	NC	59	NC	60	NC
61	NC	62	NC	63	NC	64	NC	65	NC	66	NC
67	NC	68	NC	69	NC	70	NC	71	NC	72	NC
73	NC	74	NC	75	NC	76	NC	77	NC	78	NC
79	GND	80	GND	81	GND	82	GND	83	GND	84	GND
85	GND	86	GND	87	GND	88	GND	89	GND	90	GND
91	RESET	92	ON_OFF	93	STAT_LED	94	NC	95	NC	96	NC
97	GND	98	GND	99	GND	100	GND	101		102	NC
103	NC	104	NC	105	NC	106	GND	107		108	NC
109	GND	110	GND	111	GND	112	GND	113	Reserved	114	Reserved
115	Reserved	116	Reserved	117	Reserved	118	Reserved	119	Reserved	120	Reserved

5.3.4. Antenna Connectors

5.3.4.1. SO103 – MAIN Antenna Connector

The MAIN 2G Antenna is available on SO103 and it is a female SMA connector.

A 2G compatible antenna (Refer to the product's HW Design guide) must be connected to SO103.

5.3.4.2. SO105 – GNSS Antenna Connector

The GNSS Antenna is available on SO105 and it is a female SMA connector.

A GNSS compatible antenna (Refer to the product's HW Design guide) has to be used.

5.3.5. STAT LED

The EVB Interface is provided by a LED controlled by the STAT LED line of the module.

Please refer to the Module's HW user guide for its use and behaviour.

5.3.6. Expansion Connectors

5.3.6.1. PL401

The connector carries the following signals:

Pin	Signal	Function
1	VBATT_AUX	Interface Power supply
2	Reserved	Reserved
3	NC	
4	GPIO_06	General Purpose IO #6
5	GPIO_05	General Purpose IO #5
6	NC	
7	GPIO_04	General Purpose IO #4
8	GPIO_03	General Purpose IO #3
9	GPIO_02	General Purpose IO #2
10	GPIO_01	General Purpose IO #1
11	Reserved	Reserved
12	GND	Ground
13	Reserved	Reserved
14	Reserved	Reserved
15	1PPS	PPS output signal from GNSS receiver
16	Reserved	Reserved
17	Reserved	Reserved
18	PWRMON	PWRMON from module
19	Reserved	Reserved

20	CTS1	Output for Clear to send signal (CTS) to DTE (Secondary UART)
21	RTS1	Input for Request to send signal (RTS) from DTE (Secondary UART)
22	GND	Ground
23	Reserved	Reserved
24	Reserved	Reserved
25	Reserved	Reserved
26	Reserved	Reserved
27	Reserved	Reserved
28	GNSS_LNA_EN	GNSS external LNA enable
29	VBATT_AUX	VBATT input to supply the Interface circuitery
30	GNSS_LNA_EN_EVB	GNSS LNA enable line from EVB
31	RXD1	Serial data output (RXD) to DTE (Secondary UART)
32	TXD1	Serial data input (TXD) from DTE (Secondary UART)
33	TX_TRACE_EVB	To EVB
34	RX_TRACE_EVB	To EVB
35	TX_AUX	Auxiliary UART (TX Data to DTE)
36	RX_AUX	Auxiliary UART (RX Data from DTE)
37	TXD1	Serial data input (TXD) from DTE (Secondary UART)
38	RXD1	Serial data output (RXD) to DTE (Secondary UART)
39	GPIO_04	General purpose IO 4
40	Reserved	Reserved
41	RXD	To EVB

42	RXD0	Serial data output (RXD) to DTE (Main UART)
43	RXD1	Serial data output (RXD) to DTE (Secondary UART)
44	CTS1	Output for Clear to send signal (CTS) to DTE (Secondary UART)
45	CTS0	Output for Clear to send signal (CTS) to DTE (Main UART)
46	CTS	To EVB
47	TXD	To EVB
48	TXD0	Serial data input (TXD) from DTE (Main UART)
49	TXD1	Serial data input (TXD) from DTE (Secondary UART)
50	RTS1	Input for Request to send signal (RTS) from DTE (Secondary UART)
51	RTS0	Input for Request to send signal (RTS) from DTE (Main UART)
52	RTS	To EVB

There are Jumpers on this connector that permit to select the following:

- To connect the Main UART (UART0) to EVB level translators (41-42, 45-46, 47-48, 51-52)
- To connect the Secondary UART (UART1) to the EVB level translators (41-43, 44-46, 47-49, 50-52)
- To connect the Auxiliary UART to the EVB level translators (33-35 and 34-36)

In case is needed to connect an external application to the Main UART, Secondary UART , Auxiliary UART or simply to isolate them from the rest of the circuitry it is only needed to remove the jumpers.

Please refer to **Annex 5** for interface Electric Diagrams and **Annex 6** for components layout

6. SAFETY RECOMMENDATIONS

6.1. READ CAREFULLY

Be sure the use of this product is allowed in the country and in the environment required. The use of this product may be dangerous and has to be avoided in the following areas:

- Where it can interfere with other electronic devices in environments such as hospitals, airports, aircrafts, etc.
- Where there is risk of explosion such as gasoline stations, oil refineries, etc. It is the responsibility of the user to enforce the country regulation and the specific environment regulation.

Do not disassemble the product; any mark of tampering will compromise the warranty validity. We recommend following the instructions of the hardware user guides for correct wiring of the product. The product has to be supplied with a stabilized voltage source and the wiring has to be conformed to the security and fire prevention regulations. The product has to be handled with care, avoiding any contact with the pins because electrostatic discharges may damage the product itself. Same cautions have to be taken for the SIM, checking carefully the instruction for its use. Do not insert or remove the SIM when the product is in power saving mode.

The system integrator is responsible for the functioning of the final product; therefore, care has to be taken to the external components of the module, as well as any project or installation issue, because the risk of disturbing the LTE network or external devices or having impact on the security. Should there be any doubt, please refer to the technical documentation and the regulations in force. Every module has to be equipped with a proper antenna with specific characteristics. The antenna has to be installed with care in order to avoid any interference with other electronic devices and has to guarantee a minimum distance from the body (20 cm). In case this requirement cannot be satisfied, the system integrator has to assess the final product against the SAR regulation.

The European Community provides some Directives for the electronic equipment introduced on the market. All of the relevant information is available on the European Community website:

http://ec.europa.eu/enterprise/sectors/rtte/documents/

The text of the Directive 99/05 regarding telecommunication equipment is available,

while the applicable Directives (Low Voltage and EMC) are available at:

http://ec.europa.eu/enterprise/sectors/electrical/

6.2. Disposal of this product in the European Union

According to the WEEE Directive 2012/19/EU, the crossed-out wheeled bin symbol on the product or on its packaging indicates that the product must not be disposed of with your other household waste.
For equipment in private household, it's user's responsibility to dispose of his waste equipment by handing it over to a designated collection point for the recycling of waste electrical and electronic equipment. For more information about where you can drop off your waste equipment from private household for recycling, please contact your local city office, your household waste disposal service or the retailer where you purchased the product. As a producer of electronic devices, TELIT provides for the financing of the treatment and recycling of waste returned through the designated collection points in accordance with local requirements. If you have professional electronic equipment that you purchased directly from TELIT that you wish to have picked up for recycling, please contact us to receive necessary information and instructions. The separate collection and recycling of your waste equipment at the time of disposal will help to conserve natural resources and ensure that it is recycled in a manner that protects human health and the environment.

Reference Directives:

2012/19/EU Directive of the European Parliament and of the Council of 4 July 2012 on waste electrical and electronic equipment (WEEE).

6.3. Disposal of this product in other countries outside the European Union

Please dispose of this product in accordance with local requirements; contact your local authorities or dealer and ask for the correct method of disposal.

7. REFERENCE TABLE OF RF BANDS CHARACTERISTICS

Mode	Freq. Tx (MHz)	Freq. Rx (MHz)	Channels	Tx-Rx Offset
PCS 1900	1850.2 ~ 1909.8	1930.2 ~ 1989.8	512 ~ 810	80 MHz
DCS 1800	1710 ~ 1785	1805 ~ 1880	512 ~ 885	95 MHz
GSM 850	824.2 ~ 848.8	869.2 ~ 893.8	128 ~ 251	45 MHz
EGSM 900	890 ~ 915	935 ~ 960	0 ~ 124	45 MHz
	880 ~ 890	925 ~ 935	975 ~ 1023	45 MHz

8. ACRONYMS

TTSC	Telit Technical Support Centre
USB	Universal Serial Bus
HS	High Speed
DTE	Data Terminal Equipment
UMTS	Universal Mobile Telecommunication System
WCDMA	Wideband Code Division Multiple Access
HSDPA	High Speed Downlink Packet Access
HSUPA	High Speed Uplink Packet Access
UART	Universal Asynchronous Receiver Transmitter
HSIC	High Speed Inter Chip
SIM	Subscriber Identification Module
SPI	Serial Peripheral Interface
ADC	Analog – Digital Converter
DAC	Digital – Analog Converter
I/O	Input Output
GPIO	General Purpose Input Output
CMOS	Complementary Metal – Oxide Semiconductor
MOSI	Master Output – Slave Input

MISO	Master Input – Slave Output
CLK	Clock
MRDY	Master Ready
SRDY	Slave Ready
CS	Chip Select
RTC	Real Time Clock
PCB	Printed Circuit Board
ESR	Equivalent Series Resistance
VSWR	Voltage Standing Wave Radio
VNA	Vector Network Analyzer

ANNEX 1 GE310-GNSS EVK2 INTERFACE SCHEMATIC

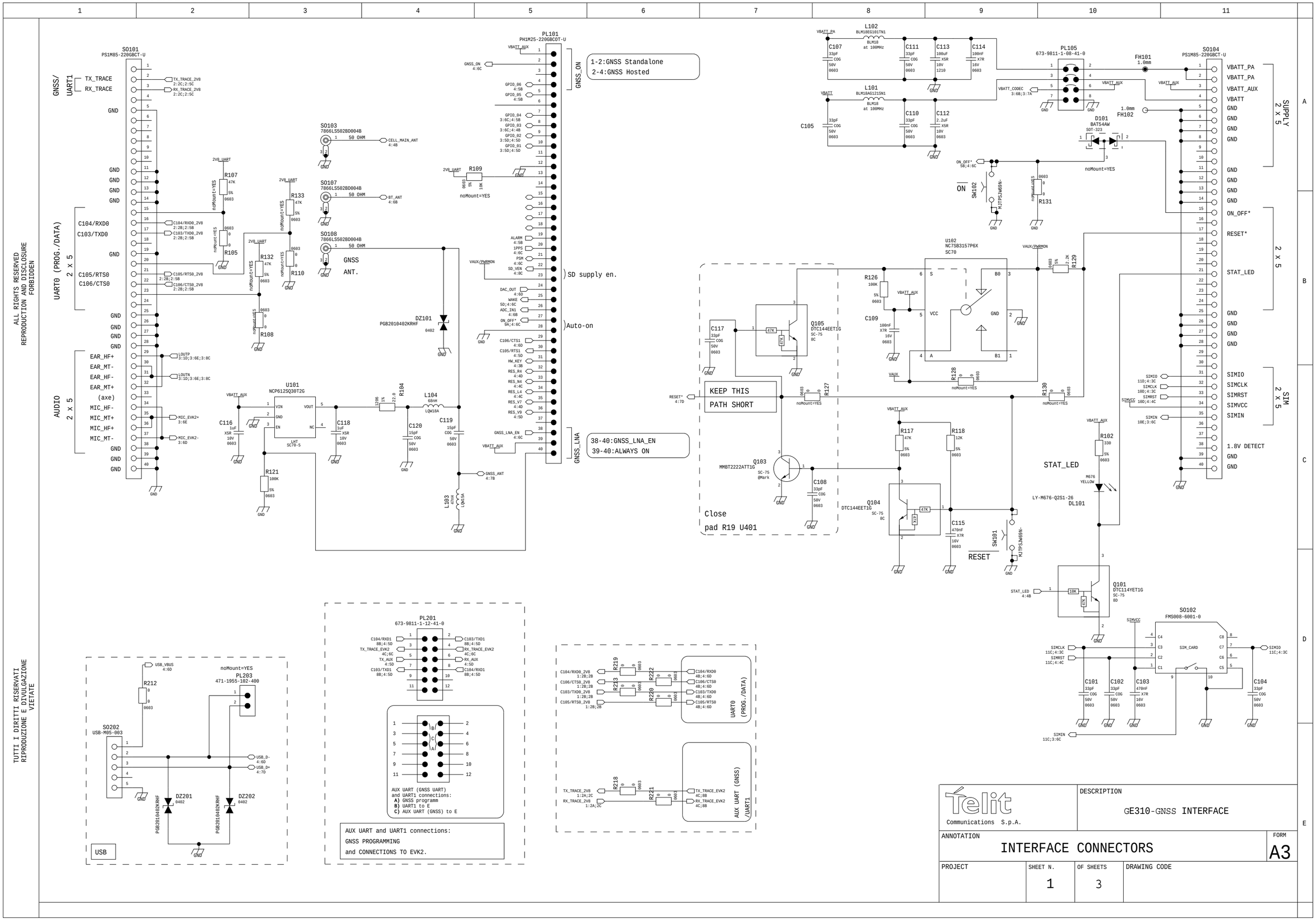

ALL RIGHTS RESERVED
REPRODUCTION AND DISCLOSURE FORBIDDEN

TUTTI I DIRITTI RISERVATI
RIPRODUZIONE E DIVULGAZIONE VIETATE

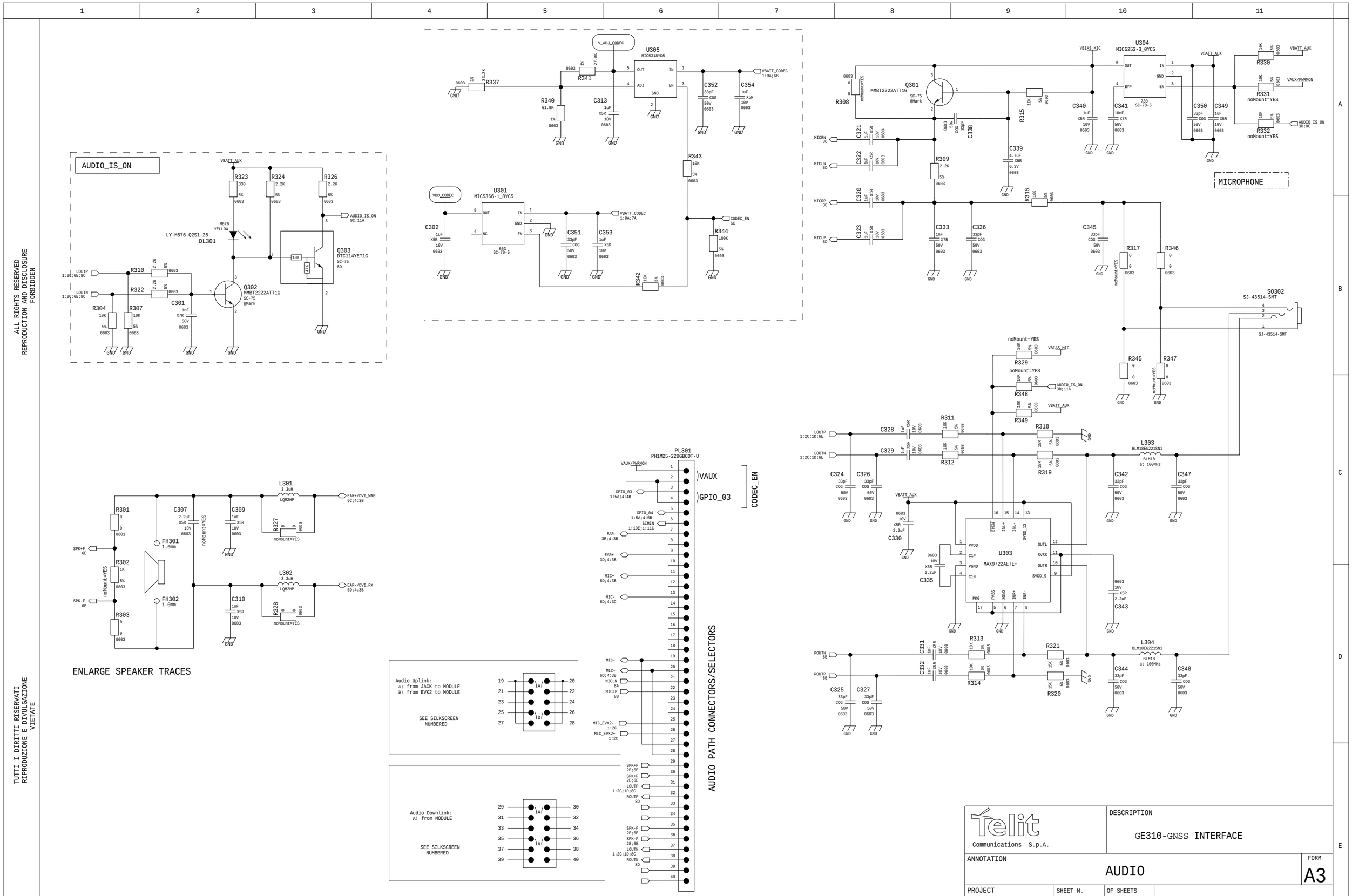
AUDIO_IS_ON
MICROPHONE
ENLARGE SPEAKER TRACES
AUDIO PATH CONNECTORS/SELECTORS
CODEC_EN
Audio Uplink:
A) from JACK to MODULE
B) from EVK2 to MODULE
SEE SILKSCREEN NUMBERED
Audio Downlink:
A) from MODULE
SEE SILKSCREEN NUMBERED
U305 MIC5318YD5
U301 MIC5366-1_8YC5
U304 MIC5253-3_6YC5
U303 MAX9722AETE+
Q301 MMBT2222ATT1G
Q302 MMBT2222ATT1G
Q303 DTC114YET1G
PL301 PH1M25-220GBCOT-U
SO302 SJ-43514-SMT
L301 3.3uH LQM2HP
L302 3.3uH LQM2HP
L303 BLM18EG221SN1
L304 BLM18EG221SN1
FH301 1.0mm
FH302 1.0mm
DL301 LY-M676-Q2S1-26
M676 YELLOW
noMount=YES
ALL RIGHTS RESERVED
REPRODUCTION AND DISCLOSURE FORBIDDEN
TUTTI I DIRITTI RISERVATI
RIPRODUZIONE E DIVULGAZIONE VIETATE
Telit Communications S.p.A.
DESCRIPTION
GE310-GNSS INTERFACE
ANNOTATION
AUDIO
FORM
A3
PROJECT
SHEET N.
2
OF SHEETS
3

ALL RIGHTS RESERVED
REPRODUCTION AND DISCLOSURE
FORBIDDEN

TUTTI I DIRITTI RISERVATI
RIPRODUZIONE E DIVULGAZIONE
VIETATE

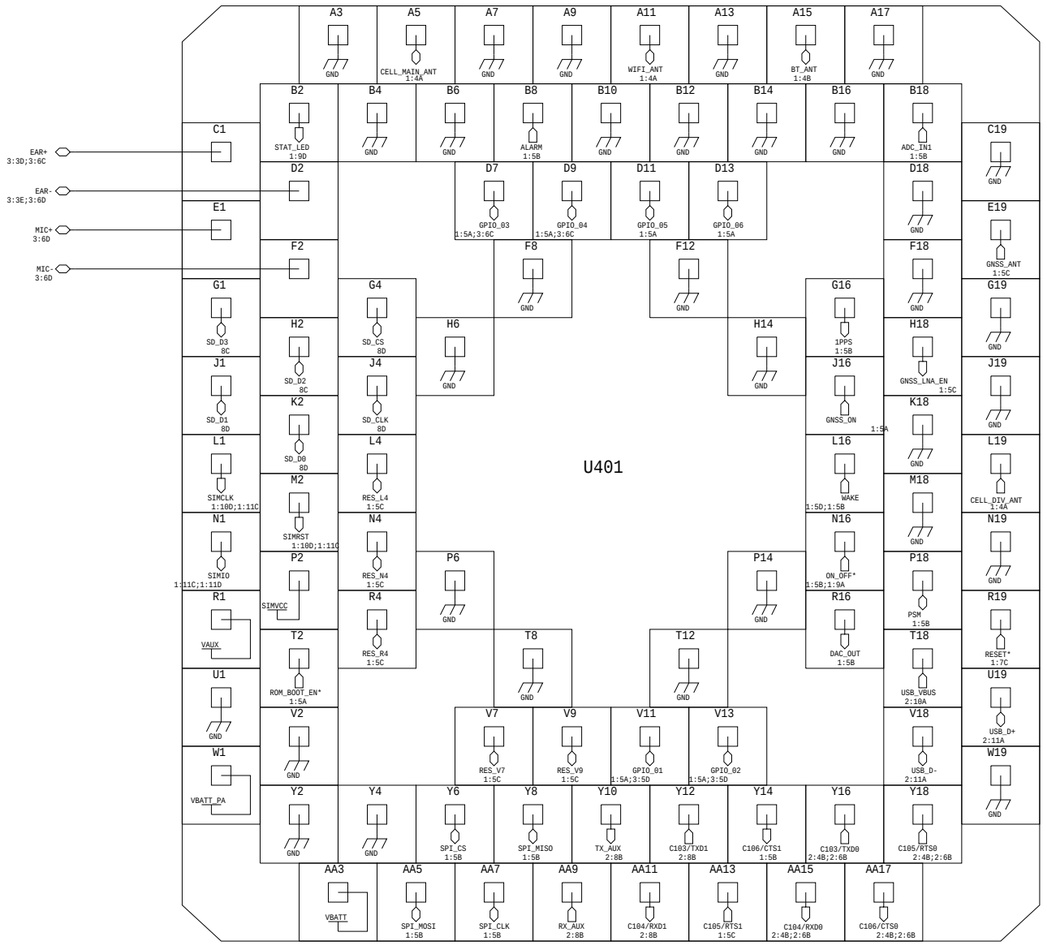

Telit Communications S.p.A.	DESCRIPTION: GE310-GNSS INTERFACE		
ANNOTATION			FORM: A3
PROJECT	SHEET N.: 3	OF SHEETS: 3	DRAWING CODE

ANNEX 2 GE310-GNSS EVK2 INTERFACE COMPONENTS LAYOUT

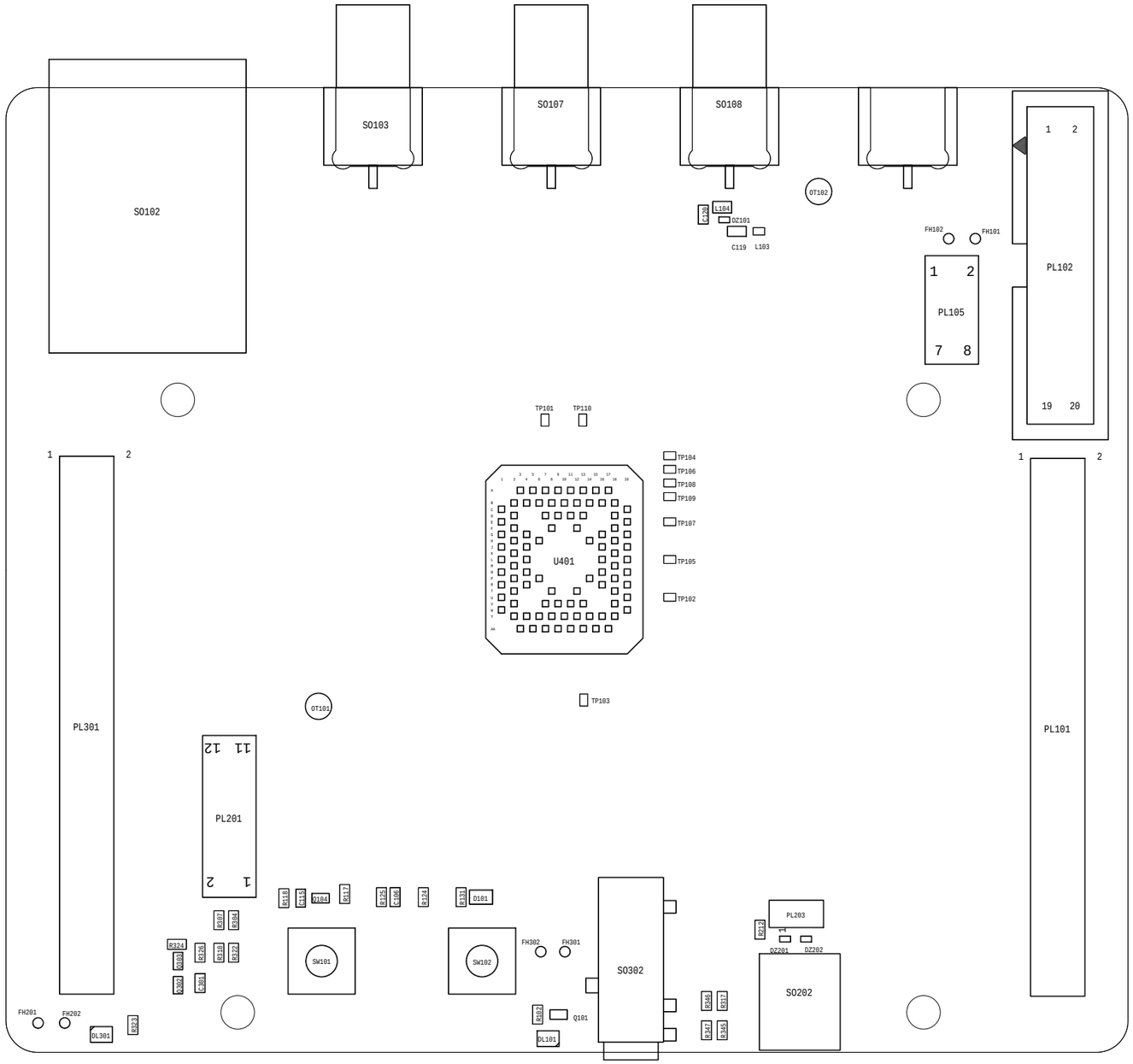
SO102
SO103
SO107
SO108
OT102
L104
C120
DZ101
C119
L103
FH102
FH101
PL102
PL105
TP101
TP110
TP104
TP106
TP108
TP109
TP107
TP105
TP102
U401
TP103
PL301
OT101
PL201
PL101
D101
SW101
SW102
FH302
FH301
SO302
PL203
DZ201
DZ202
SO202
Q101
FH201
FH202
DL301
DL101

TOP

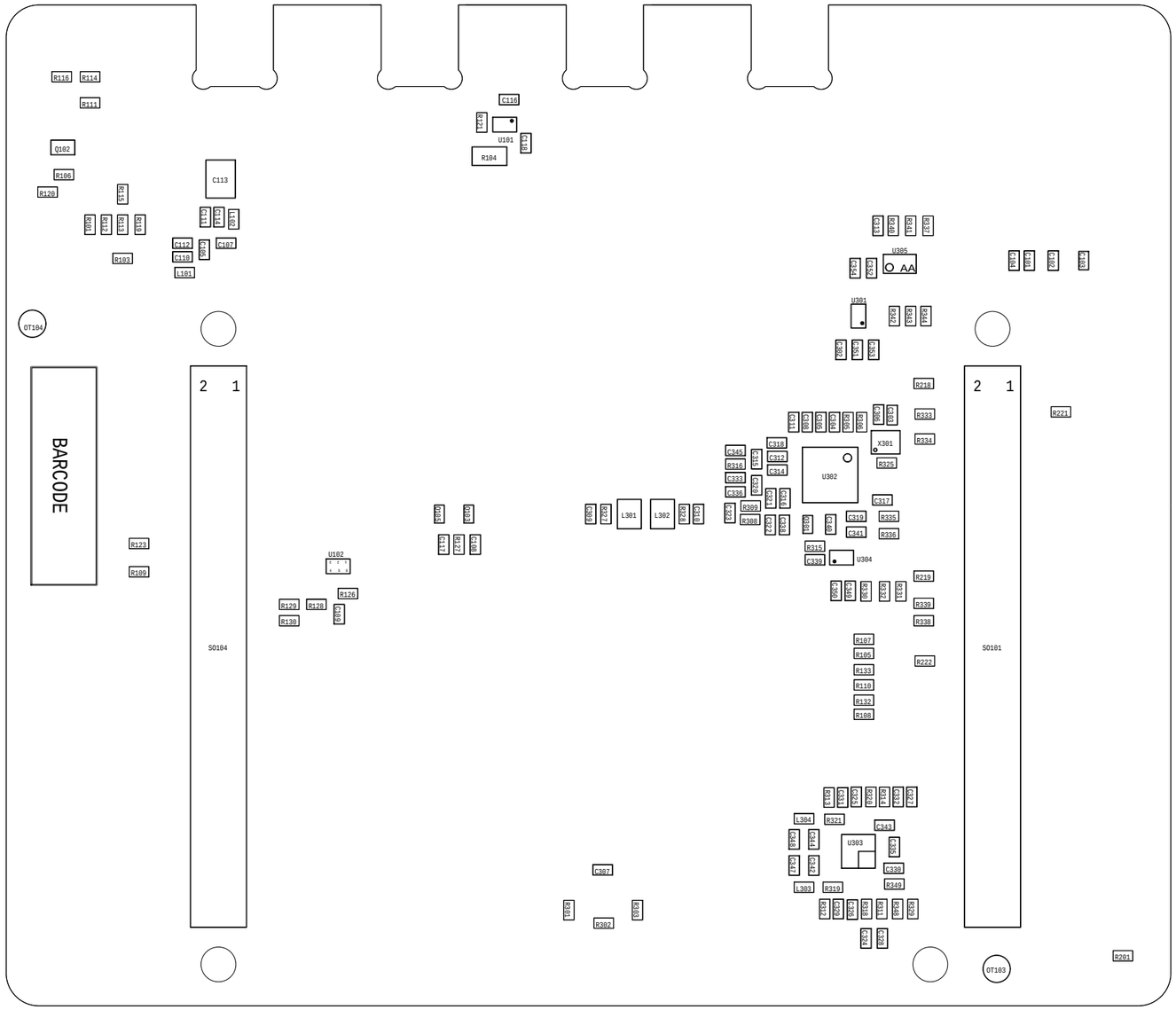
BARCODE
SO104
SO101
U101
U102
U301
U302
U303
U304
U305
X301
L301
L302
L303
L304
C113
C116
C107
C112
C110
L101
R104
R116
R114
R111
Q102
R106
R120
R103
R123
R109
R129
R128
R138
R126
R218
R221
R333
R334
R325
R335
R336
R315
R339
R338
R219
R107
R105
R133
R110
R132
R108
R222
R321
R319
R349
R302
R201
OT104
OT103

BOTTOM

ANNEX 3 GE310-GNSS TLB INTERFACE SCHEMATICS

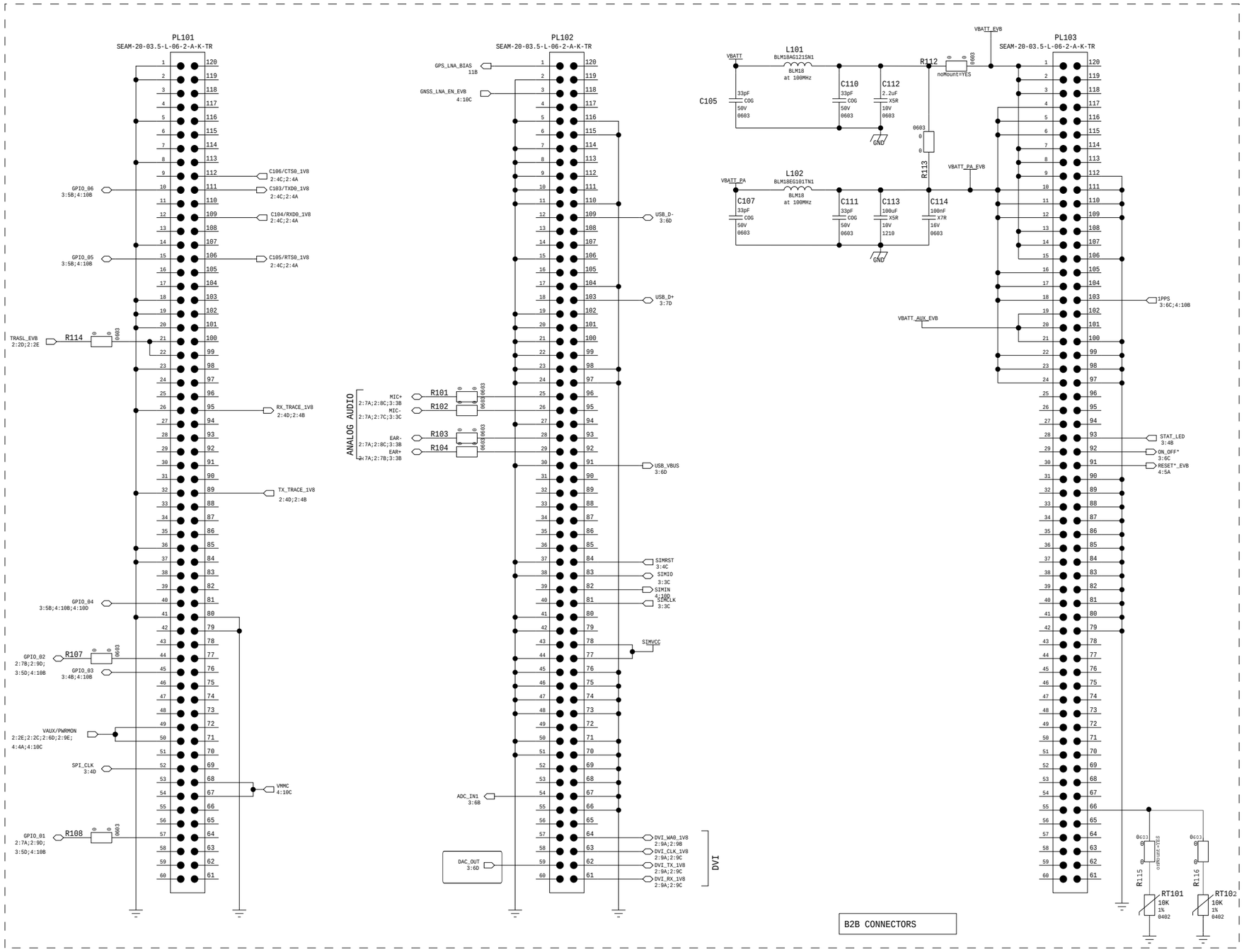

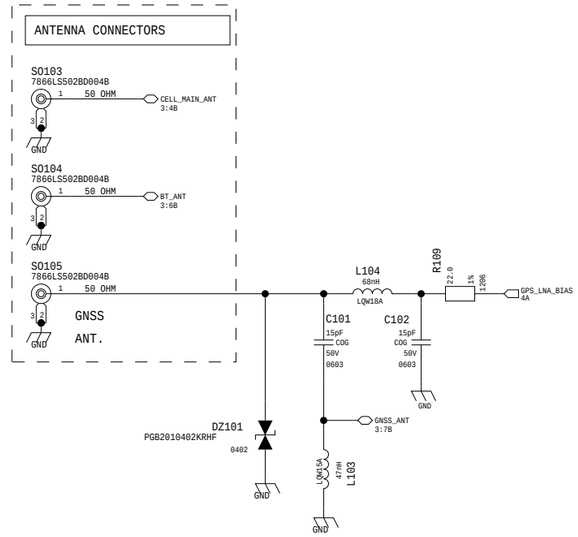

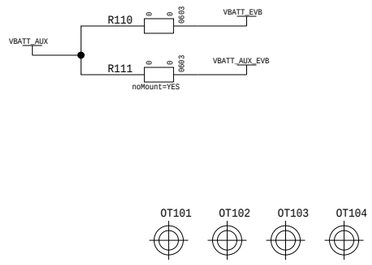

ALL RIGHTS RESERVED
REPRODUCTION AND DISCLOSURE
FORBIDDEN

TUTTI I DIRITTI RISERVATI
RIPRODUZIONE E DIVULGAZIONE
VIETATE

Telit Communications S.p.A.

DESCRIPTION: GE310-GNSS TLB for IoT EVB

ANNOTATION: INTERFACE CONNECTORS

FORM: A3

PROJECT	SHEET N.	OF SHEETS	DRAWING CODE
	1	4	

ALL RIGHTS RESERVED
REPRODUCTION AND DISCLOSURE
FORBIDDEN

TUTTI I DIRITTI RISERVATI
RIPRODUZIONE E DIVULGAZIONE
VIETATE

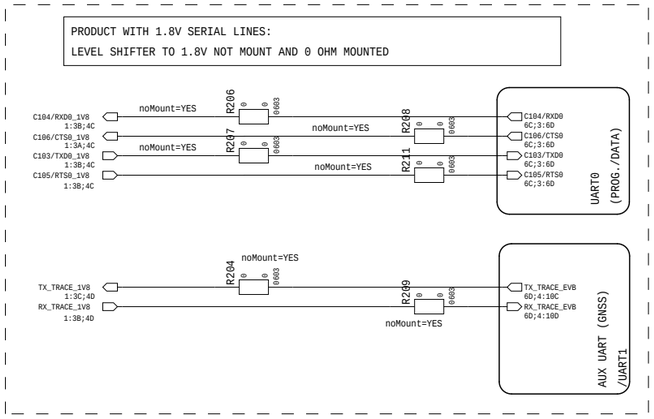

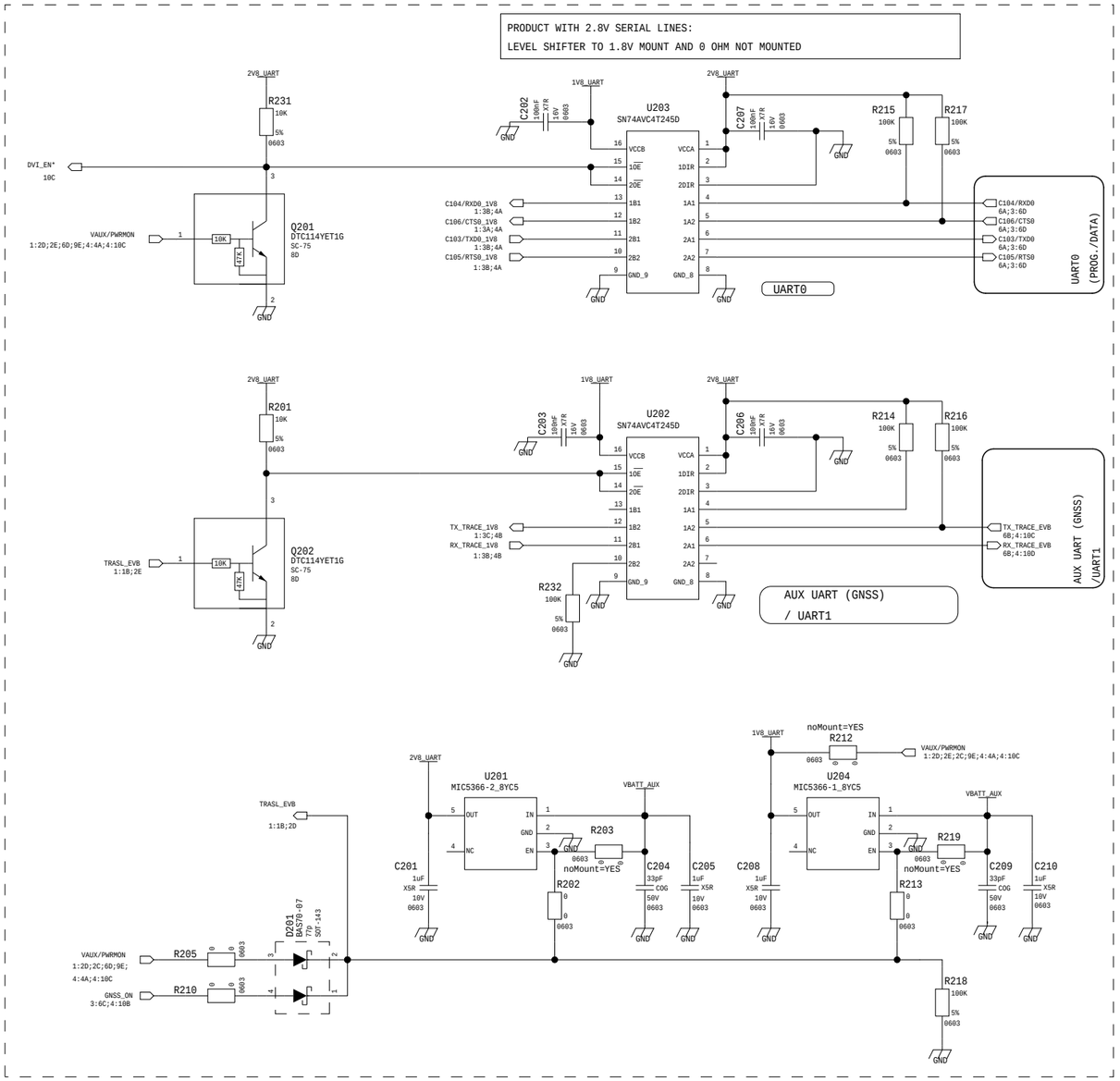

Telit Communications S.p.A.	DESCRIPTION: GE310-GNSS TLB for IoT EVB
ANNOTATION: Translators	FORM: A3
PROJECT	SHEET N.: 2 / OF SHEETS: 4 / DRAWING CODE

ALL RIGHTS RESERVED
REPRODUCTION AND DISCLOSURE
FORBIDDEN

TUTTI I DIRITTI RISERVATI
RIPRODUZIONE E DIVULGAZIONE
VIETATE

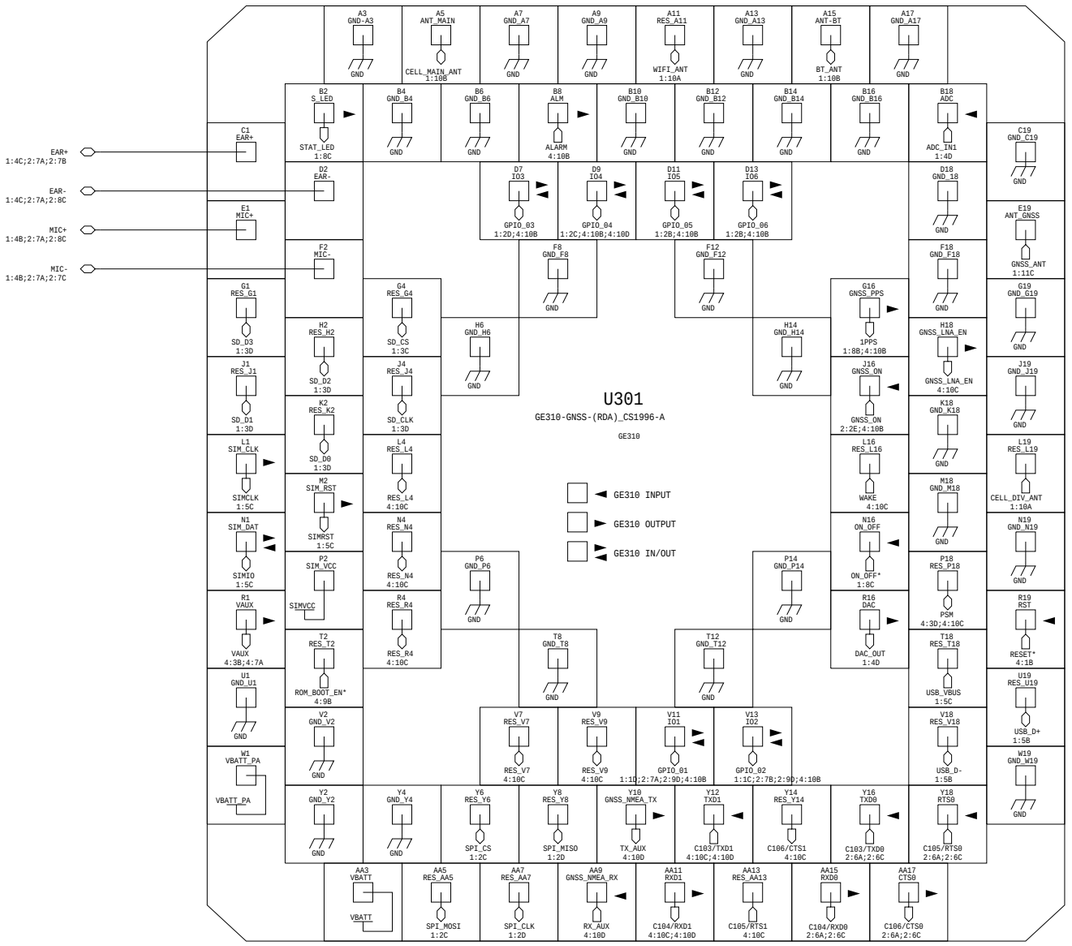

Telit Communications S.p.A.

DESCRIPTION: GE310-GNSS TLB for IoT EVB

ANNOTATION: GE310-GNSS MODULE

FORM: A3

PROJECT	SHEET N.	OF SHEETS	DRAWING CODE
	3	4	

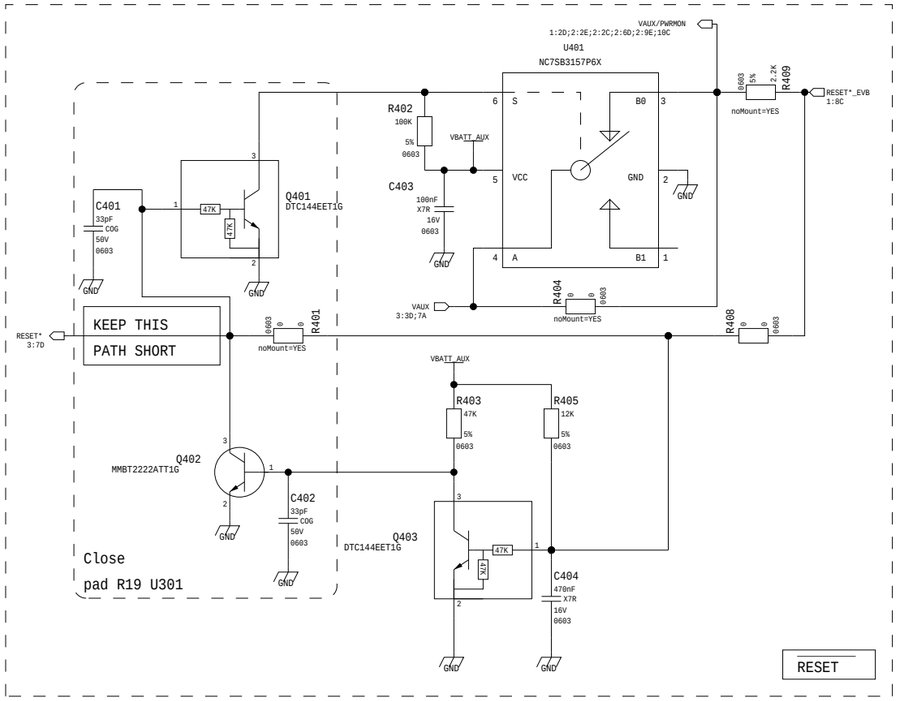

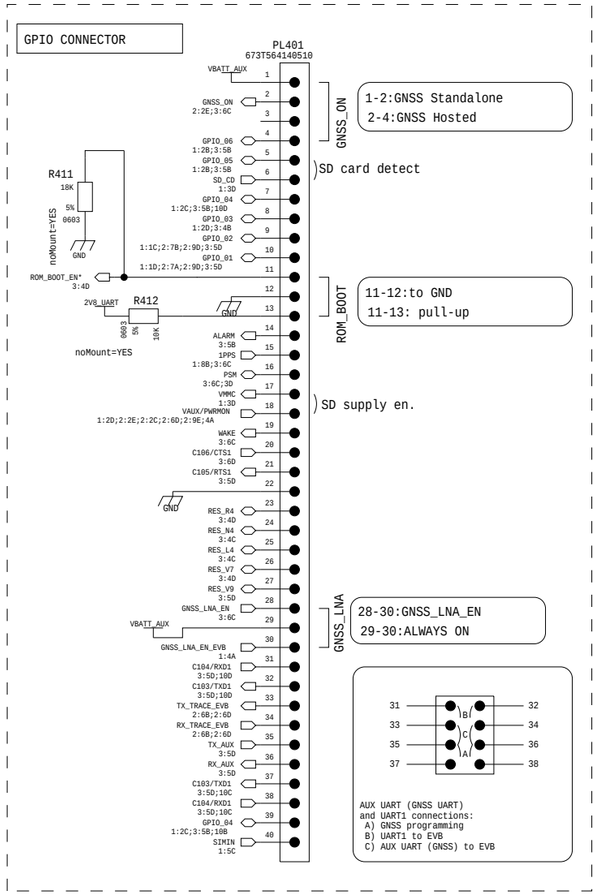

ALL RIGHTS RESERVED
REPRODUCTION AND DISCLOSURE
FORBIDDEN

TUTTI I DIRITTI RISERVATI
RIPRODUZIONE E DIVULGAZIONE
VIETATE

Telit Communications S.p.A.

DESCRIPTION: GE310-GNSS TLB for IoT EVB

ANNOTATION: Miscellaneous

FORM: A3

PROJECT	SHEET N.	OF SHEETS	DRAWING CODE
	4	4	

ANNEX 4 GE310-GNSS TLB INTERFACE COMPONENTS LAYOUT

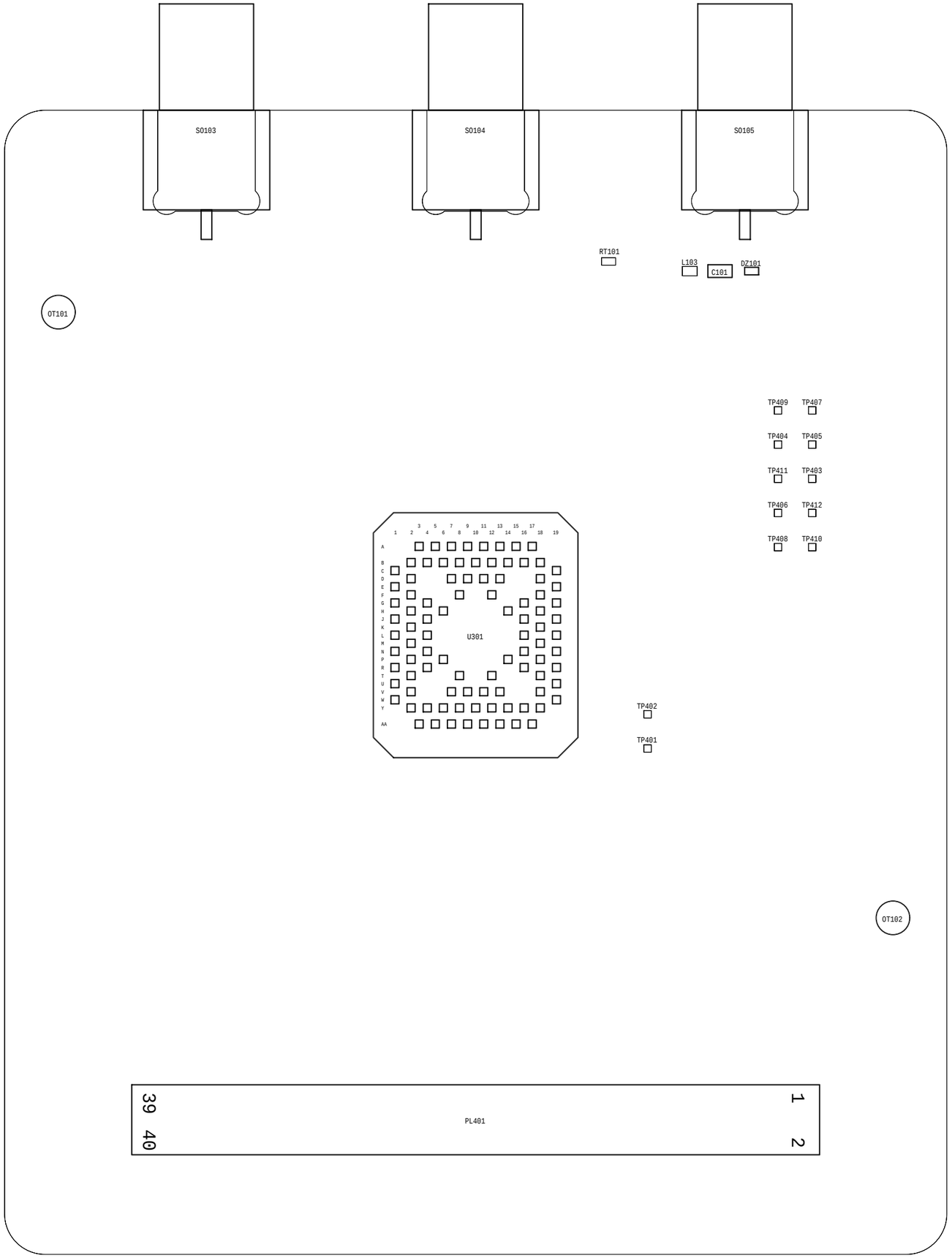
SO103
SO104
SO105
RT101
L103
C101
DZ101
OT101
TP409
TP407
TP404
TP405
TP411
TP403
TP406
TP412
TP408
TP410
U301
TP402
TP401
OT102
PL401
39
40
1
2

TOP

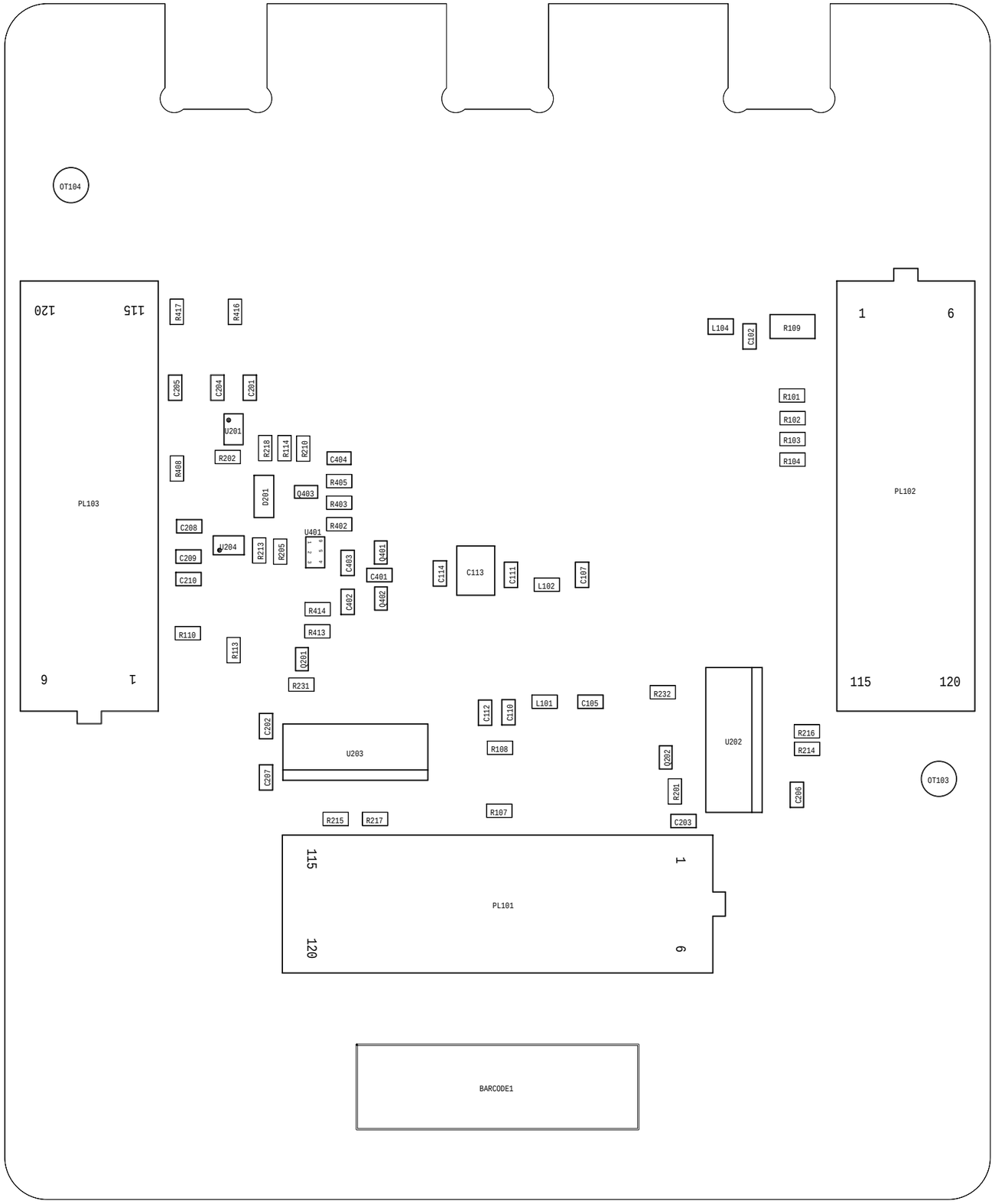
OT104
PL103
120
115
9
1
R417
R416
C205
C204
C201
U201
R218
R114
R210
R202
R408
C404
R405
D201
Q403
R403
R402
C208
U401
U204
R213
R205
C209
C403
Q401
C210
C401
C402
Q402
R414
R413
R110
R113
Q201
R231
C114
C113
C111
L102
C107
L104
C102
R109
R101
R102
R103
R104
PL102
1
6
115
120
C112
C110
L101
C105
R232
C202
U203
R108
Q202
U202
R216
R214
C207
R201
C206
OT103
R215
R217
R107
C203
PL101
115
120
1
6
BARCODE1

BOTTOM

ANNEX 5 ME310G1 TLB INTERFACE SCHEMATICS

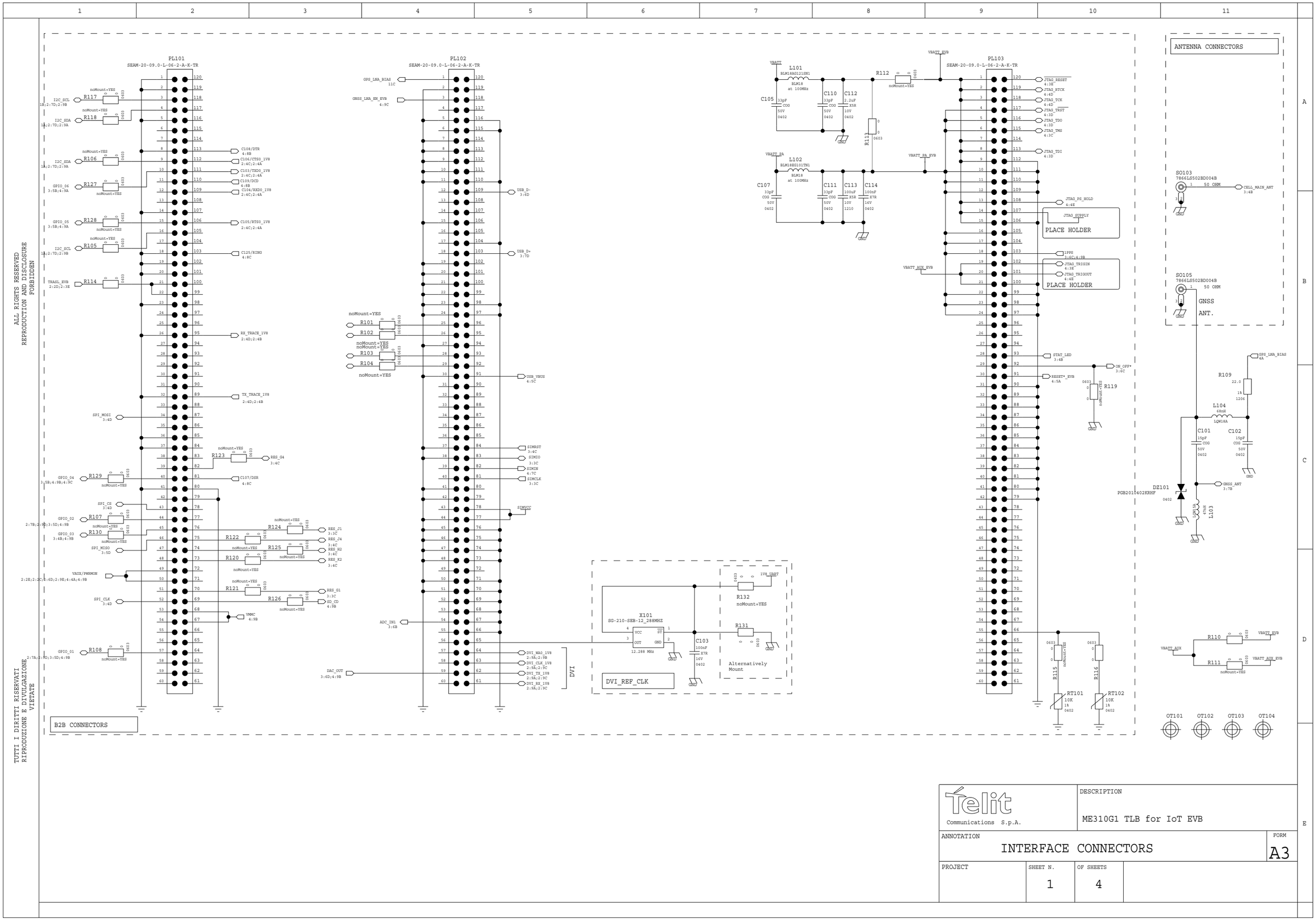

Telit Communications S.p.A.

DESCRIPTION: ME310G1 TLB for IoT EVB

ANNOTATION: INTERFACE CONNECTORS

FORM: A3

PROJECT	SHEET N.	OF SHEETS
	1	4

ALL RIGHTS RESERVED
REPRODUCTION AND DISCLOSURE
FORBIDDEN

TUTTI I DIRITTI RISERVATI
RIPRODUZIONE E DIVULGAZIONE
VIETATE

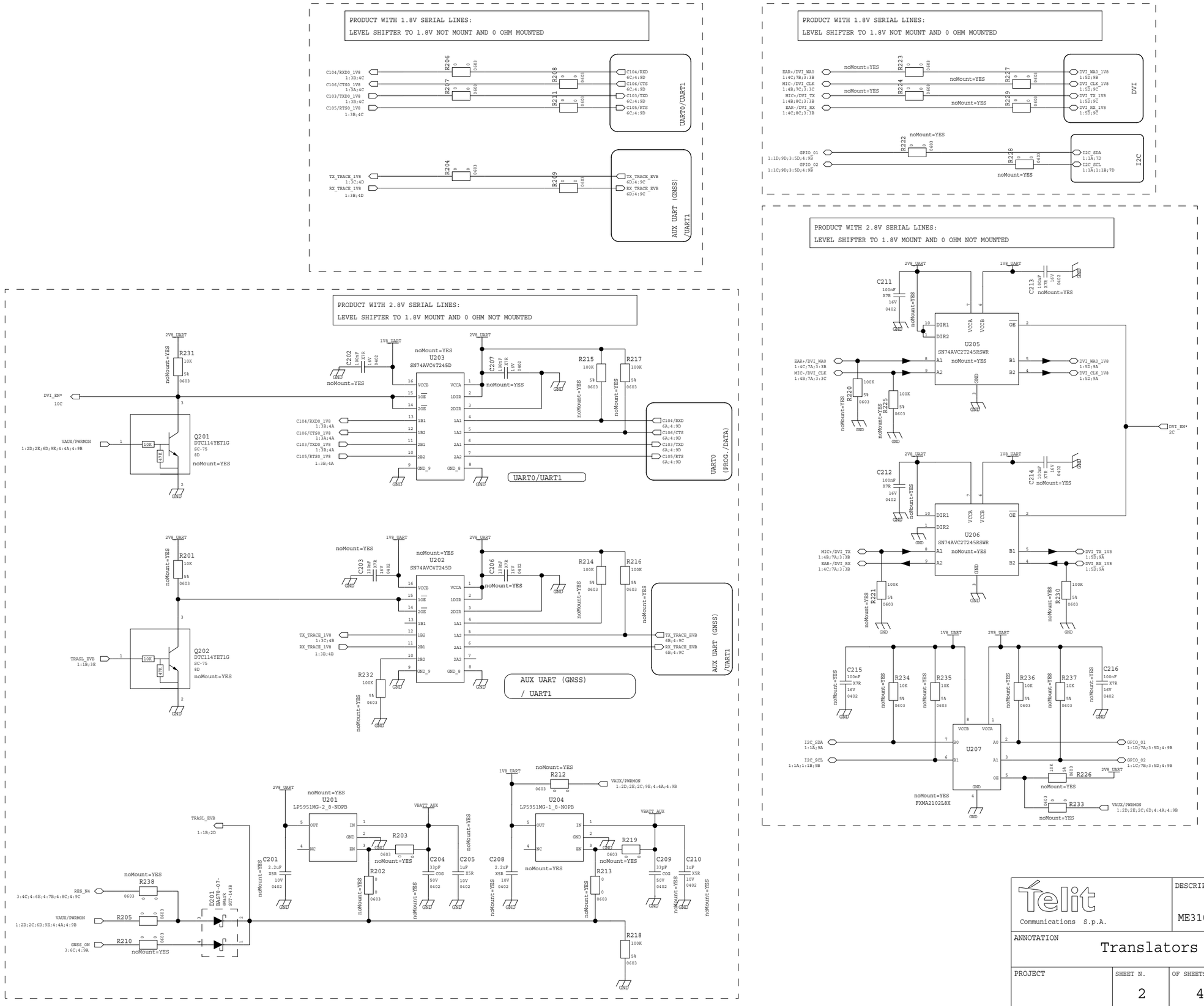

Telit Communications S.p.A.	DESCRIPTION: ME310G1 TLB for IoT EVB
ANNOTATION: Translators	FORM: A3
PROJECT	SHEET N.: 2 / OF SHEETS: 4

ALL RIGHTS RESERVED
REPRODUCTION AND DISCLOSURE
FORBIDDEN

TUTTI I DIRITTI RISERVATI
RIPRODUZIONE E DIVULGAZIONE
VIETATE

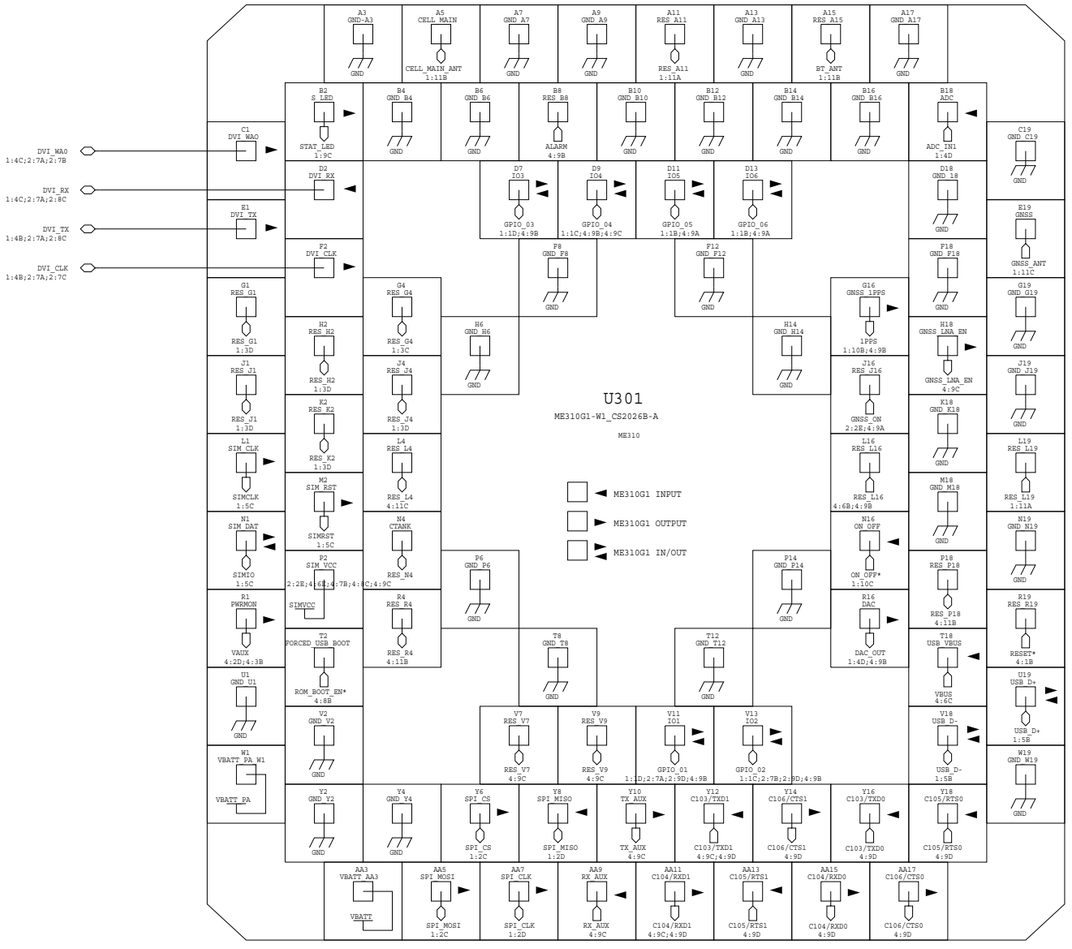

Telit Communications S.p.A.	DESCRIPTION ME310G1 TLB for IoT EVB	
ANNOTATION GE310-GNSS MODULE		FORM A3
PROJECT	SHEET N. 3	OF SHEETS 4

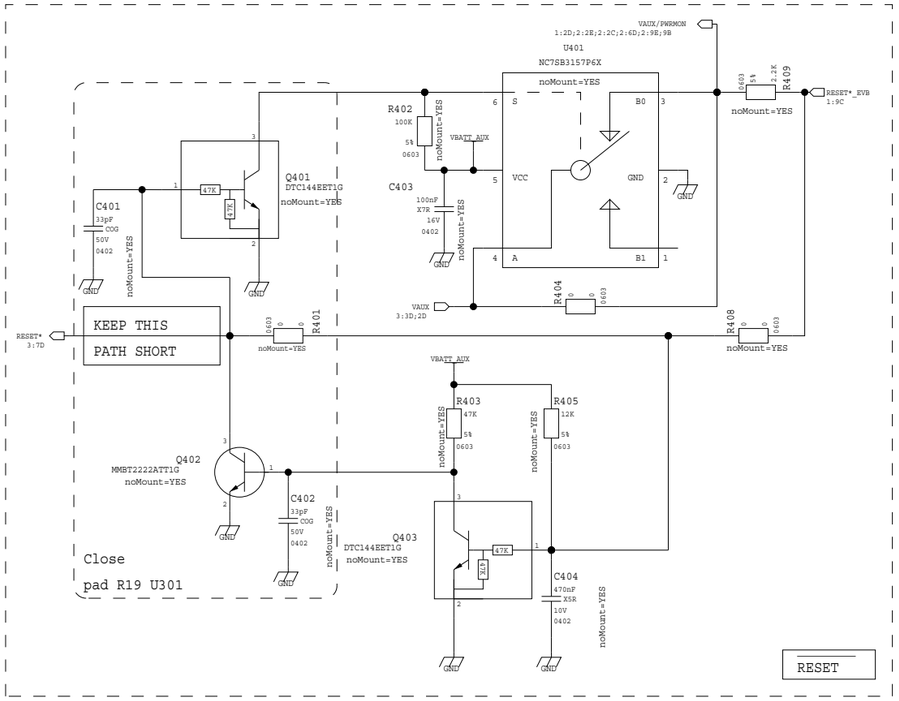

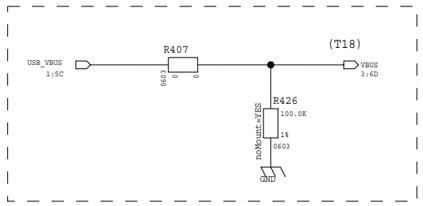

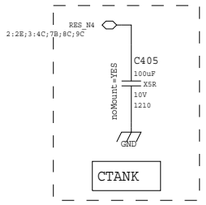

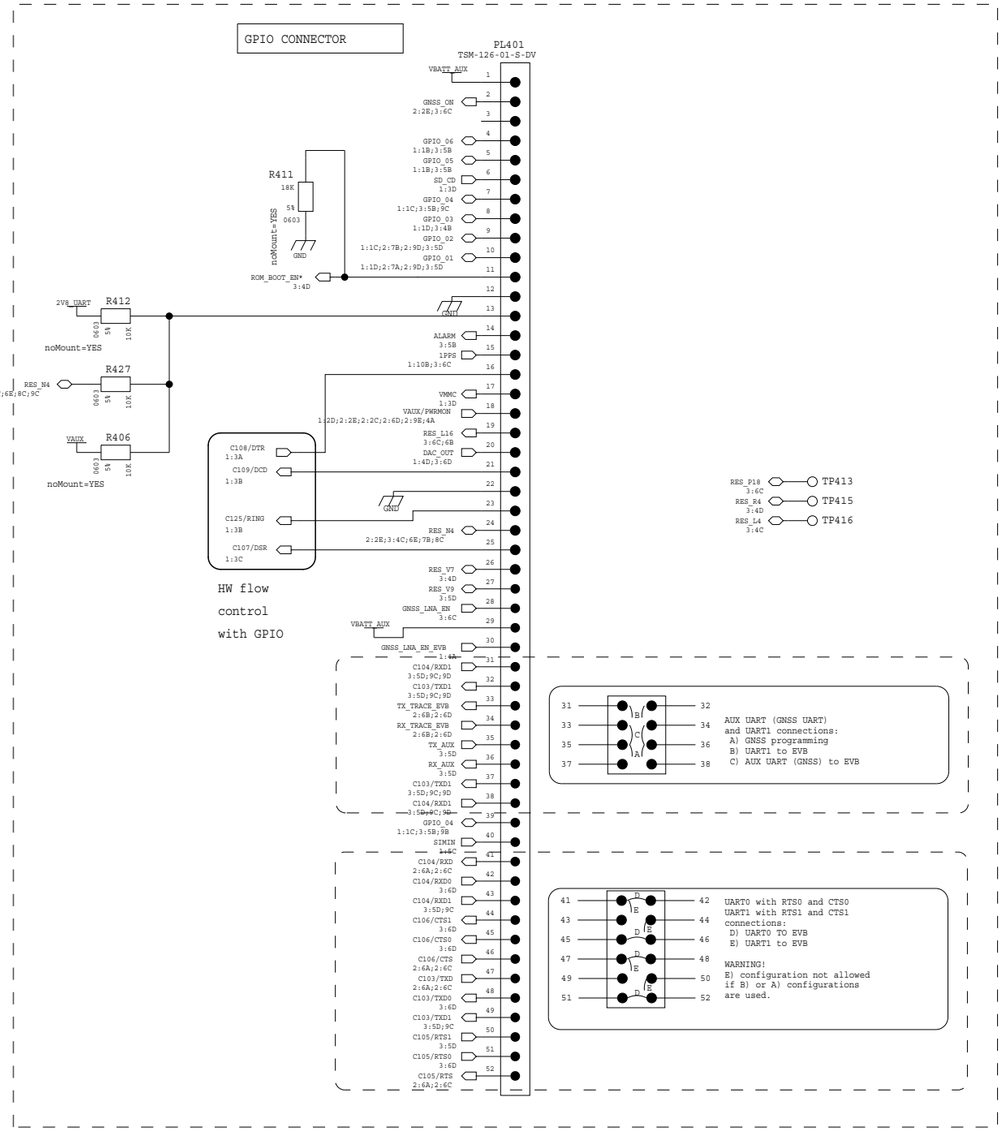

ALL RIGHTS RESERVED
REPRODUCTION AND DISCLOSURE
FORBIDDEN

TUTTI I DIRITTI RISERVATI
RIPRODUZIONE E DIVULGAZIONE
VIETATE

Telit Communications S.p.A.

DESCRIPTION: ME310G1 TLB for IoT EVB

ANNOTATION: Miscellaneous

FORM: A3

PROJECT	SHEET N.	OF SHEETS
	4	4

ANNEX 6 ME310G1 TLB INTERFACE COMPONENTS LAYOUT

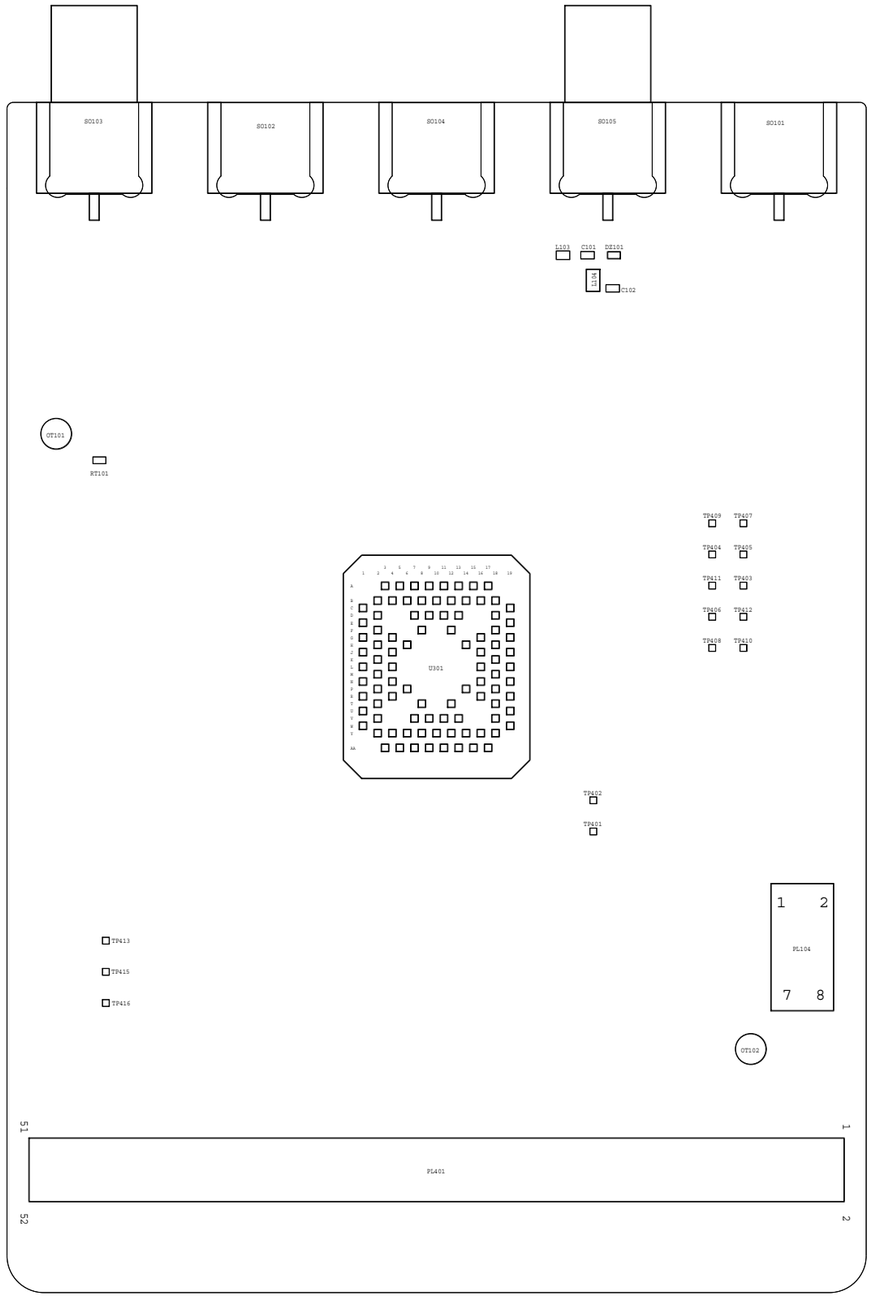
SO103
SO102
SO104
SO105
SO101
L101
C101
DS101
1.5K
C102
OT101
RT101
TP409
TP407
TP404
TP405
TP411
TP403
TP406
TP412
TP408
TP410
U301
TP402
TP401
1
2
PL104
7
8
TP413
TP415
TP416
OT102
51
1
PL401
52
2

TOP

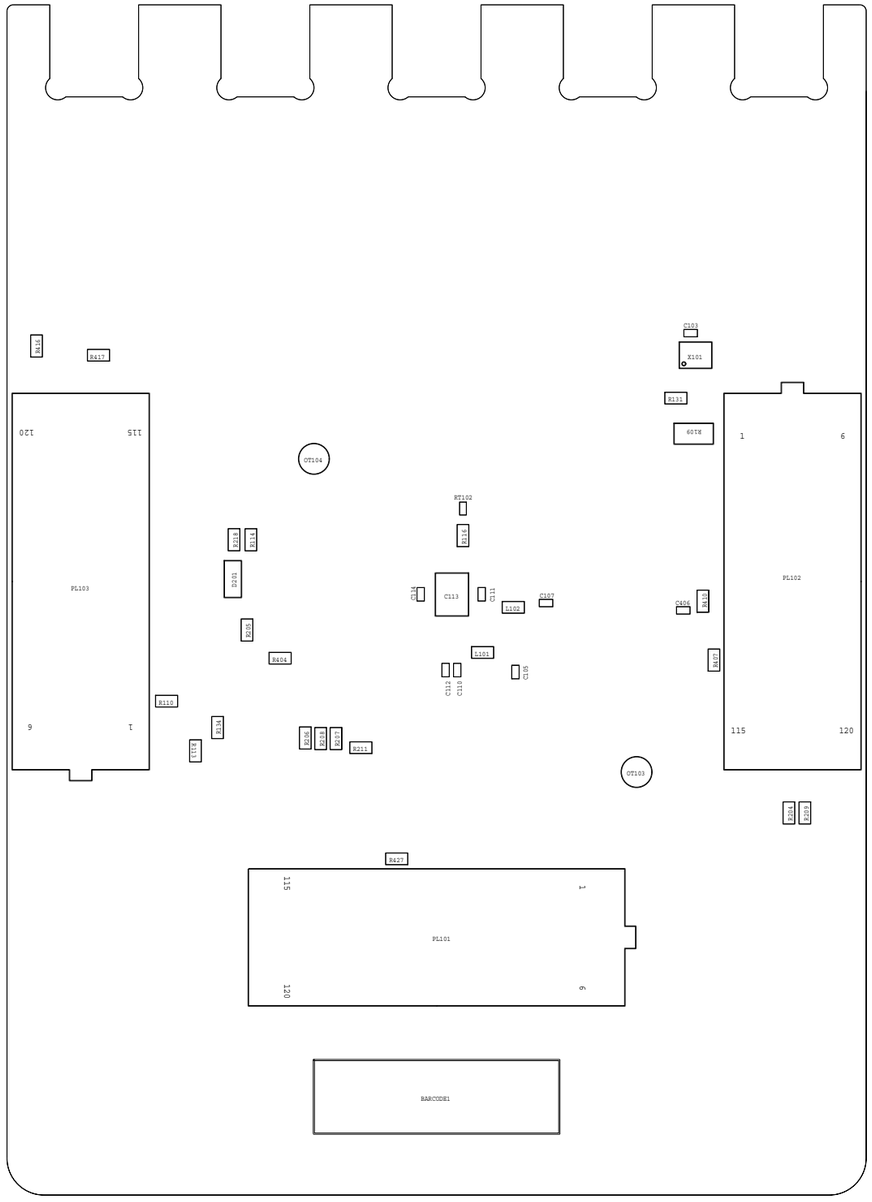
PL103
PL102
PL101
BARCODE1
X101
C113
L102
L101
RT102
OT104
OT103
R417
R427
R211
R404
R110
R131
R109
R408
R409
R410
R411
R412
R413
R414
R415
R416
R418
R419
R420
R421
R422
R423
R424
R425
R426
D201
C101
C107
C111
C112
C114
C115
C401
1
6
9
115
120

BOTTOM

9. DOCUMENT HISTORY

Revision	Date	Changes
Rev 0	2019/05/21	First issue
Rev.1	2022/05/21	Added ME310G1-WW/-W2/-W3 in applicability, Par.1.5 Updated related Documents list Added Annex 1 to 6 for IF schematics and components layout with searchable features.

SUPPORT INQUIRIES

Link to **www.telit.com** and contact our technical support team for any questions related to technical issues.

www.telit.com

Telit Communications S.p.A.
Via Stazione di Prosecco, 5/B
I-34010 Sgonico (Trieste), Italy

Telit IoT Platforms LLC
5300 Broken Sound Blvd, Suite 150
Boca Raton, FL 33487, USA

Telit Wireless Solutions Inc.
3131 RDU Center Drive, Suite 135
Morrisville, NC 27560, USA

Telit Wireless Solutions Co., Ltd.
8th Fl., Shinyoung Securities Bld.
6, Gukjegeumyung-ro8-gil, Yeongdeungpo-gu
Seoul, 150-884, Korea

Telit Wireless Solutions Ltd.
10 Habarzel St.
Tel Aviv 69710, Israel

Telit Wireless Solutions
Technologia e Servicos Ltda
Avenida Paulista, 1776, Room 10.C
01310-921 São Paulo, Brazil

Telit reserves all rights to this document and the information contained herein. Products, names, logos and designs described herein may in whole or in part be subject to intellectual property rights. The information contained herein is provided "as is". No warranty of any kind, either express or implied, is made in relation to the accuracy, reliability, fitness for a particular purpose or content of this document. This document may be revised by Telit at any time. For most recent documents, please visit www.telit.com

Copyright © 2016, Telit

Mod.0818 2017-01 Rev.0

[01.2017]