SIGN	DATE	DESCRIPTION	APPROVER
1	01/18/07	Solaering temperature changed from 245° to 250°	tason
2	01/18/07	Part NO Changed	tason
3	04/21/09	Explanation changed.	Eris
4	04/21/09	Dimension allowance.	Eris
5	12/26/12	Update the drawing	Guoxue
6	12/26/12	Soldering temperature is changed from 250°C±10°C/5 Sec to 260°C±5°C/5 Sec	Guoxue
7	12/26/12	Change the dimensional tolerance	Guoxue

THIS IS CAD DRAWING, DO NOT REVISE MANUALLY!!!

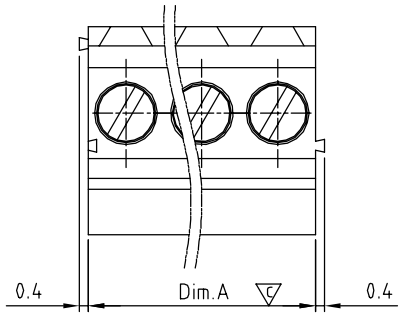

Dimension A&B

Dim.A	N×3.5
Dim.B	(N-1)×3.5

N=Number of poles

Poles	A&B Tolerance
2P-5P	+0.15/-0.15
6P-10P	+0.20/-0.20
11P-16P	+0.30/-0.30
17P-24P	+0.40/-0.40

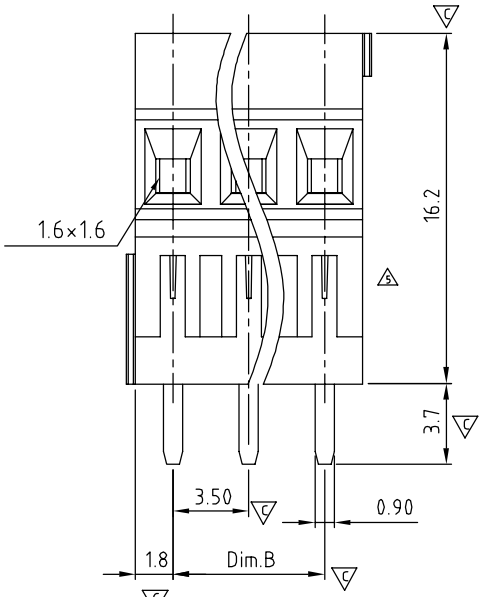

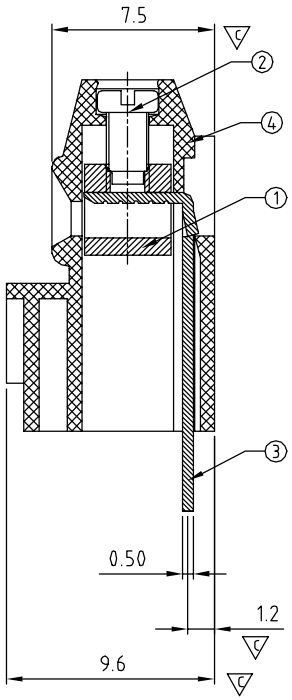

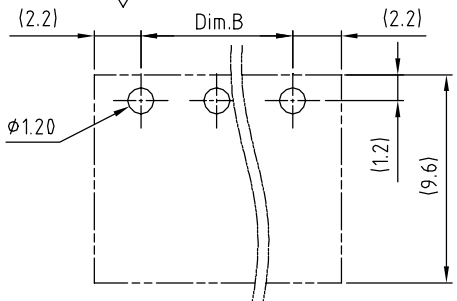

P.C.B. LAYOUT
TOP VIEW

Material

- Item 1 Clamp : Brass , Ni plated
- Item 2 Terminal screw: Steel Zinc plating "-" slot type
- Item 3 Wire guard solder pin : Brass ,Tin plated
- Item 4 Terminal housing : Thermoplastic (UL94V-0)

Electrical

- Voltage rating: 300VAC
- Current rating: 10A
- Wire range:
- Solid wire(AWG): 16-24
- Stranded wire(AWG): 16-24
- Torque(Lb-In): 1.7
- Screw: M2
- Wire strip length: 5-6mm
- Withstanding Voltage: 1.6KV
- Operating temperature: -40°C to +115°C
- Soldering temperature: 260°C±5°C/5 Sec
- Safety Approval : c UL us
- Critical dimension:

YP xx 01x 0 xxxx G

- xx: 02 2 POLES; 03 3 POLES; ... ...; 24 24 POLES
- 01x: 0 Black; 5 Green (RAL 6018/T); 6 Blue; 8 Grey (RAL 7035/D)
- xxxx: 0000 "@"Logo (Standard); 000A:"ANYTEK"Logo; Any special item by customer recuest please contact sales department
- G: RoHS compliant (lead<4%) In copper Alloy

ANYTEK

CUSTOMER COPY

ALL RIGHTS RESERVED. REPRODUCTION OR ISSUE TO THIRD PARTIES IN ANY FORM WHATEVER IS NOT PERMITTED WITHOUT WRITTEN AUTHORITY FROM THE PROPRIETOR. PROPERTY OF ANYTEK TECHNOLOGY CO., LTD

TITLE	YP 3.5 Series 2p-24p				
PART NO.	YPxx01x0xxxxG			DWG NO.	8YP0001
APPROVED	CHECKED	DESIGNED	DRAWN	CUST NO.	
		Guoxue 2012.12.26	Guoxue 2012.12.26	UNIT: mm / SCALE: NONE / SHEET: 01/01 / REV.: G	

Tolerance	
X.	±0.50
X.X	±0.30
X.XX	±0.10
X°	±1°