嘉尼企業股份有限公司CANAL ELECTRONIC CO.,LTD.

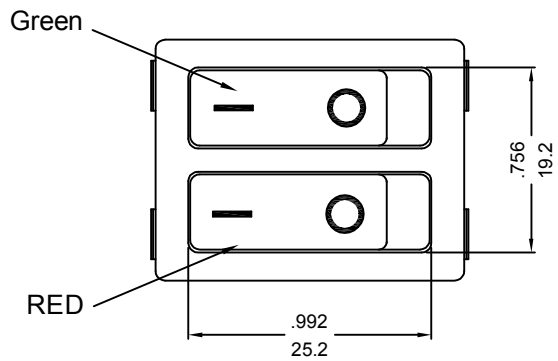

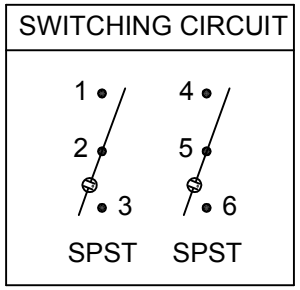

Pole on/off illuminated

ROCKER SWITCH MODEL: R SERIES

RATING:16(4)A 125/250V~ (cURus5)
16(4)A 250V~ T125/55（ENEC15/CQC)
DIELECTRIC WITHSTAND VOLTAGE: 1500VAC 1 MIN
INSULATION RESISTANCE:500VDC 100MΩ (MIN)
CONTACT RESISTANCE:20mΩ INITIAL(MAX.)
ILLUMINATION: 200~250VAC

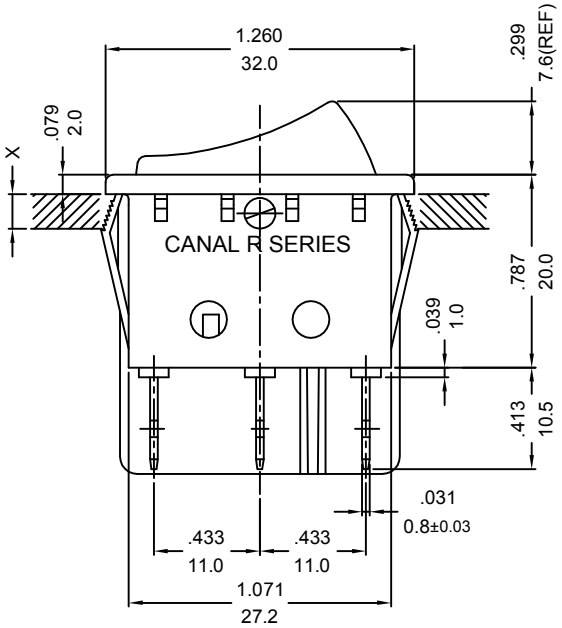

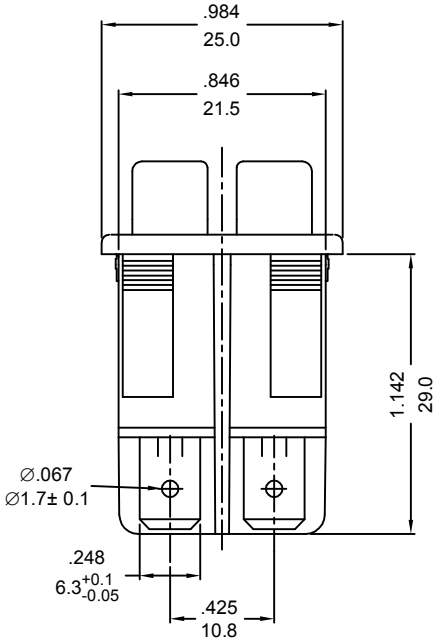

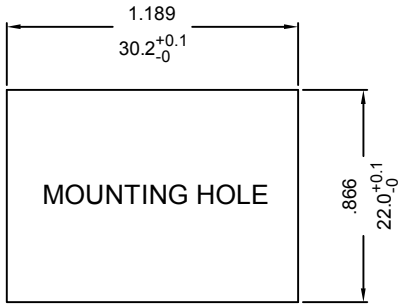

X=(0.75 TO 1.25mm)
PANEL THICKNESS

嘉尼工程
2025.03.13
文件管制章

NOTE: TOLERANCES UNLESS OTHERWISE SPECIFIED:± .012/ 0.3 (in/mm)

REVISION	DESCRIPTION	REVISED BY	TOLERANCES				ANGLE ½°	UNIT	mm	PART NAME	R SPEC DRAWING	DWG NO
4			DRAWN BY	达志各	DESIGNED BY	蔡剑	SCALE	5/4				S10254A
3												
2			CHECKED BY		APPROVED BY		DATE	2025.03.12		PART NO	R-210T5W-GBDA-11BNA8	
1 2025.03.12	首次出圖	达志各										