used for: D-SUB COMBINATION

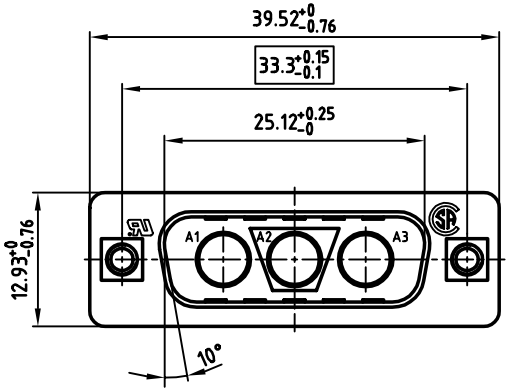

5:1

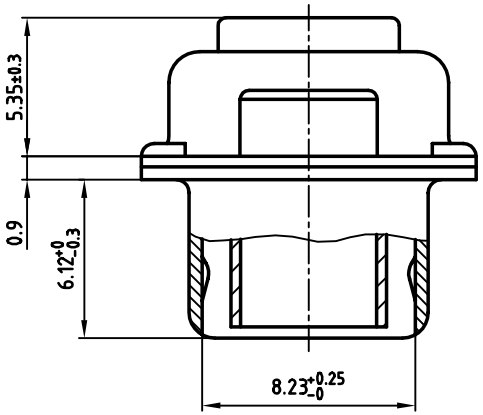

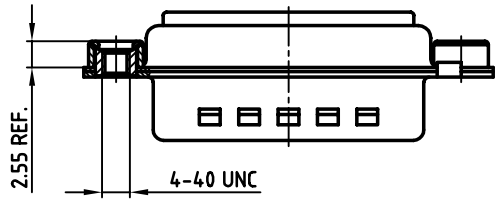

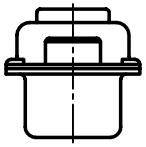

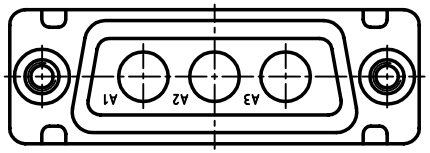

NOTES:

1. METALSHELLS: STEEL; min. 320µ" TIN
2. INSULATORS: PBT GF UL 94 V-0, GREEN
3. THREADED INSERT: COPPER ALLOY; min. 200µ" TIN over 80µ" NICKEL
4. MAXIMUM TORQUE VALUE FOR THREAD: 6" LBS
5. [ ] = CRITICAL DIMENSION: SPC

Directive 2002/95/EC „RoHS" Compliant

THIS DRAWING MAY NOT BE COPIED OR REPRODUCED IN ANY WAY, AND MAY NOT BE PASSED ON TO A THIRD PARTY WITHOUT WRITTEN PERMISSION. OWNERSHIP AND COPYRIGHT OF CONEC GmbH

DO NOT ALTER CAD DRAWING BY HAND

CONEC CORPORATION
BRAMPTON, ONTARIO

tolerance

rev.	description	date	name

2001	date	name
drawn	27.02.	Parei
appd.	27.02.	E. Mickenbecker
norm		
d-old		

scale: 2:1 (5:1)
material: SEE NOTES

title:
D-SUB COMBINATION MALE
3W3CP
with threaded insert

dwg no: 13K1A195A
AutoCAD 2000
DIN-A 3
sh: 1/1

part no: 303W3CPXX99A30X