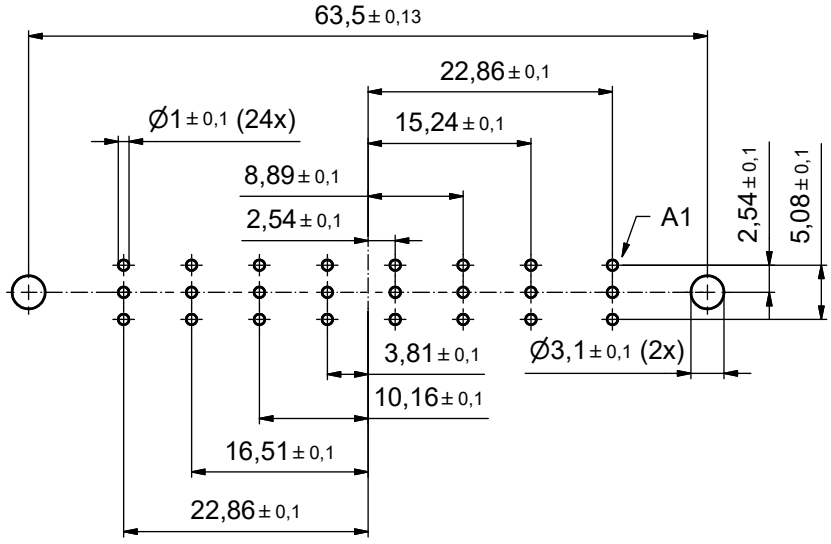

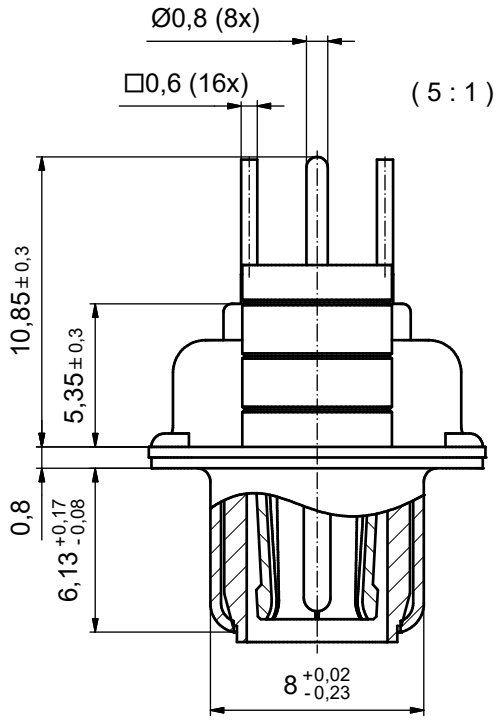

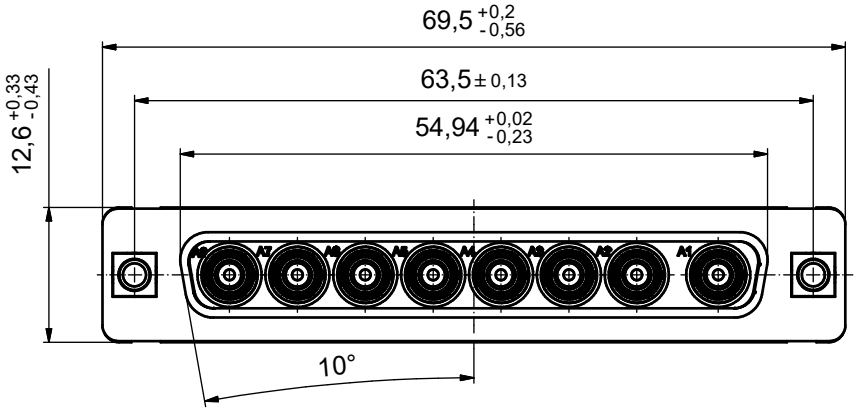

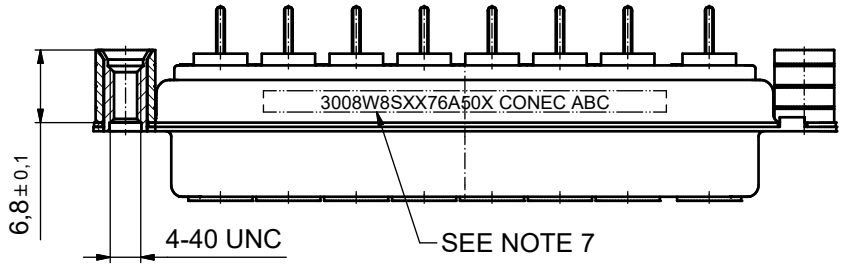

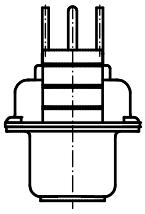

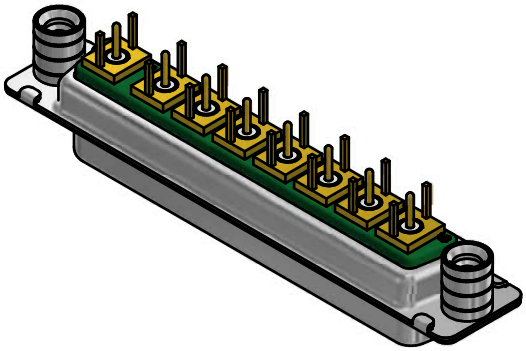

NOTES:

1. METALSHELLS: STEEL; min. 315µin TIN over 40-80µin NICKEL
2. INSULATOR: PBT GF UL 94 V-0; GREEN
3. COAXIAL CONTACTS 50 OHM: COPPER ALLOY
   PLATING INNER CONDUCTOR: 50µin HARD GOLD over min. 50µin NICKEL
   PLATING OUTER CONDUCTOR: MATING AREA:30µin HRAD GOLD over min. 50µin NICKEL
   TERMINATION SIDE: GOLD FLASH over NICKEL
4. THREADED REAR SPACERS: COPPER ALLOY; min. 200µin TIN over 80µin NICKEL
5. SLEEVES: COPPER ALLOY; min. 200µin TIN over 80µin NICKEL
6. MAXIMUM TORQUE VALUE FOR THREAD: 6 in.LB
7. CONNECTOR IS PART MARKED: 3008W8SXX76A50X CONEC ABC

Directive 2002/95/EC RoHS compliant

THIS DRAWING MAY NOT BE COPIED OR REPRODUCED IN ANY WAY, AND MAY NOT BE PASSED ON TO A THIRD PARTY WITHOUT WRITTEN PERMISSION. OWNERSHIP AND COPYRIGHT OF CONEC GmbH

DO NOT ALTER CAD DRAWING BY HAND

rev.	description	date	name
a	Original		

finish:

tolerance

dim. in mm

	date	name
drawn	26.09.11	Henneboel
appd.	26.09.11	Koch
norm		
d-old		

CONEC®

scale: 2:1 (5:1)

material: see notes

title: D-SUB COMBINATION FEMALE
8W8S
with threaded rear spacer

dwg no: 13K1A3782

DIN-A3

sh: 1

part no: 3008W8SXX76A50X