used for: D-SUB

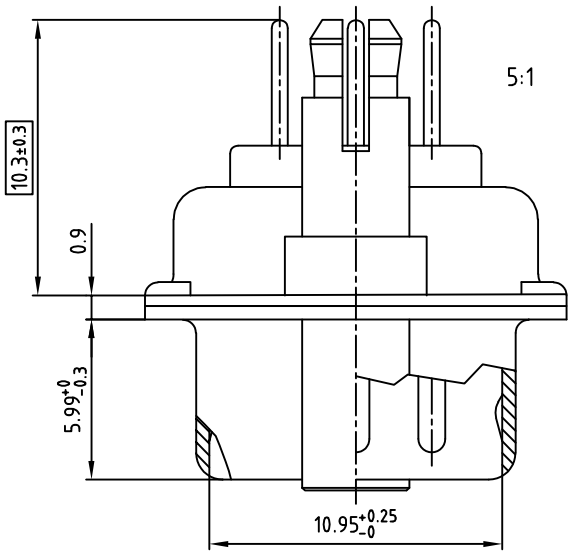


NOTES:

1. METALSHELLS: STEEL; min. 320µin TIN
2. INSULATORS: PBT GF UL 94 V-0, BLACK
3. CONTACTS: COPPER ALLOY
   PLATING: min. 8µin HARD GOLD OVER min. 50µin NICKEL
4. THREADED LOCK / SPACER CLIP: COPPER ALLOY; min. 200µin TIN over 80µin NICKEL
   PCB-HOLE: Ø3.1±0.1; PCB THICKNESS 1.6mm
5. P.C.B. HOLE DRILLINGS ON DRAWING NO.: 16K1IIUA
6. MAXIMUM TORQUE VALUE FOR THREAD: 6 in.LB
7. CONNECTOR IS PART MARKED: 163A16299X CONEC ABC
8. [ ] = CRITICAL DIMENSION

ROHS compliant, exemption 6c/
ROHS konform, Ausnahme 6c

THIS DRAWING MAY NOT BE COPIED OR REPRODUCED IN ANY WAY, AND MAY NOT BE PASSED ON TO A THIRD PARTY WITHOUT WRITTEN PERMISSION. OWNERSHIP AND COPYRIGHT OF CONEC GmbH

DO NOT ALTER CAD DRAWING BY HAND

| rev. | description | date | name |
|---|---|---|---|
| a | Original | | |

tolerance
0 ± 0.50 mm
0.0 ± 0.25 mm
0.00 ± 0.10 mm
∠ ± 1.5°

| 2002 | date | name |
|---|---|---|
| drawn | 25.06. | Parei |
| appd. | 25.06. | E. Mickenbecker |
| norm | DIN 41652 | |
| d-old | | |

CONEC®

scale: 2:1 (5:1)
material: SEE NOTES

title:
D-SUB MALE
50pos. SOLDER PIN STRAIGHT
with threaded lock and spacer clip

dwg no: 16K1A686
AutoCAD 2000
DIN-A 3
sh: 1/1

part no: 163A16299X