Part no.	Finish Pos.1	Finish Pos.2	Finish Pos.3	Finish Pos. 4/5
131J25029X	min. 50µin HARD GOLD over min. 50µin NICKEL	min. 30µin HARD GOLD over min. 50µin NICKEL	NICKEL PLATED	GOLD FLASH over NICKEL
131A25029X	GOLD FLASH over NICKEL	GOLD FLASH over NICKEL	NICKEL PLATED	GOLD FLASH over NICKEL

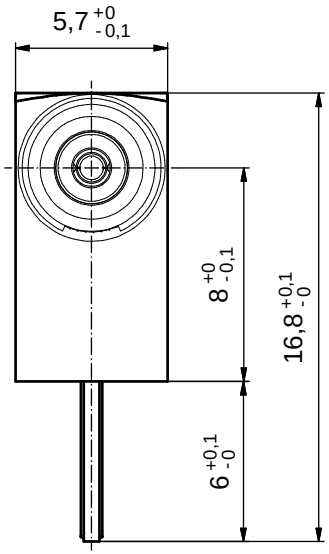

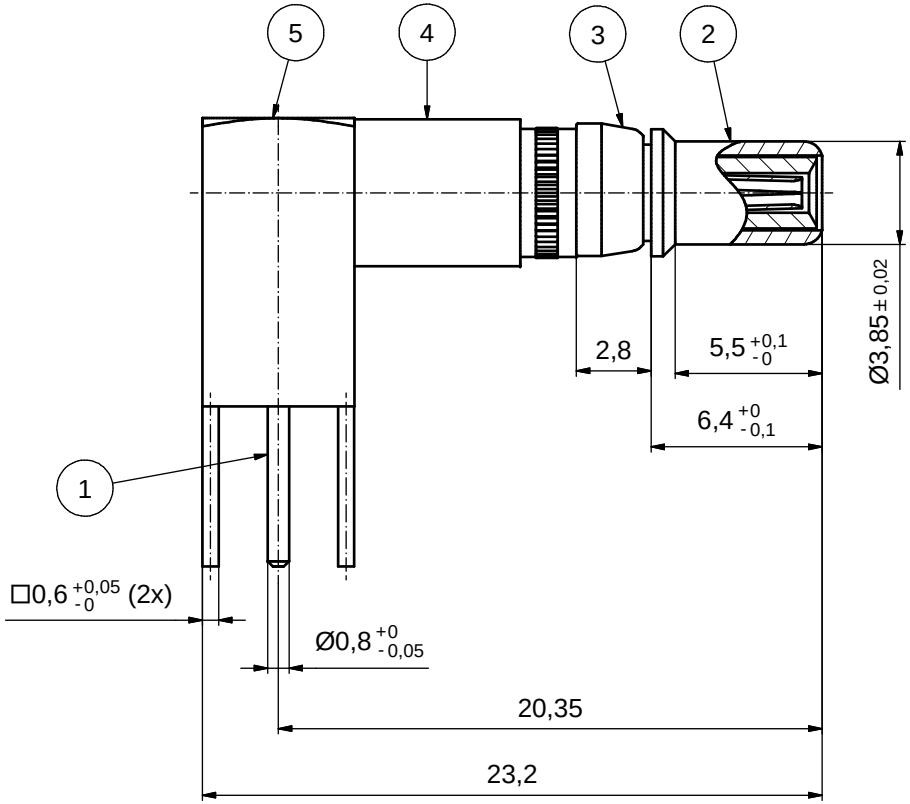

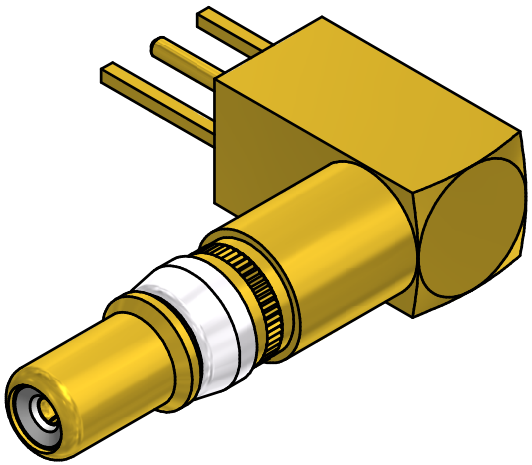

Directive 2002/95/EC RoHS compliant

THIS DRAWING MAY NOT BE COPIED OR REPRODUCED IN ANY WAY, AND MAY NOT BE PASSED ON TO A THIRD PARTY WITHOUT WRITTEN PERMISSION. OWNERSHIP AND COPYRIGHT OF CONEC GmbH

DO NOT ALTER CAD DRAWING BY HAND

rev.	description	date	name
a	Original		

tolerance

dim. in mm

	date	name
drawn	28.03.2014	Henneboel
appd.	02.04.2014	Lehmenkühler
norm		
d-old		

CONEC®

scale: 5:1

material: SEE TABLE

title: COAXIAL CONTACT PLUG 50 OHM
Solder termination 90° with 3 pins
for D-SUB COMBINATION

dwg no: 13K2A071A

DIN-A3

sh: 1

part no: SEE TABLE