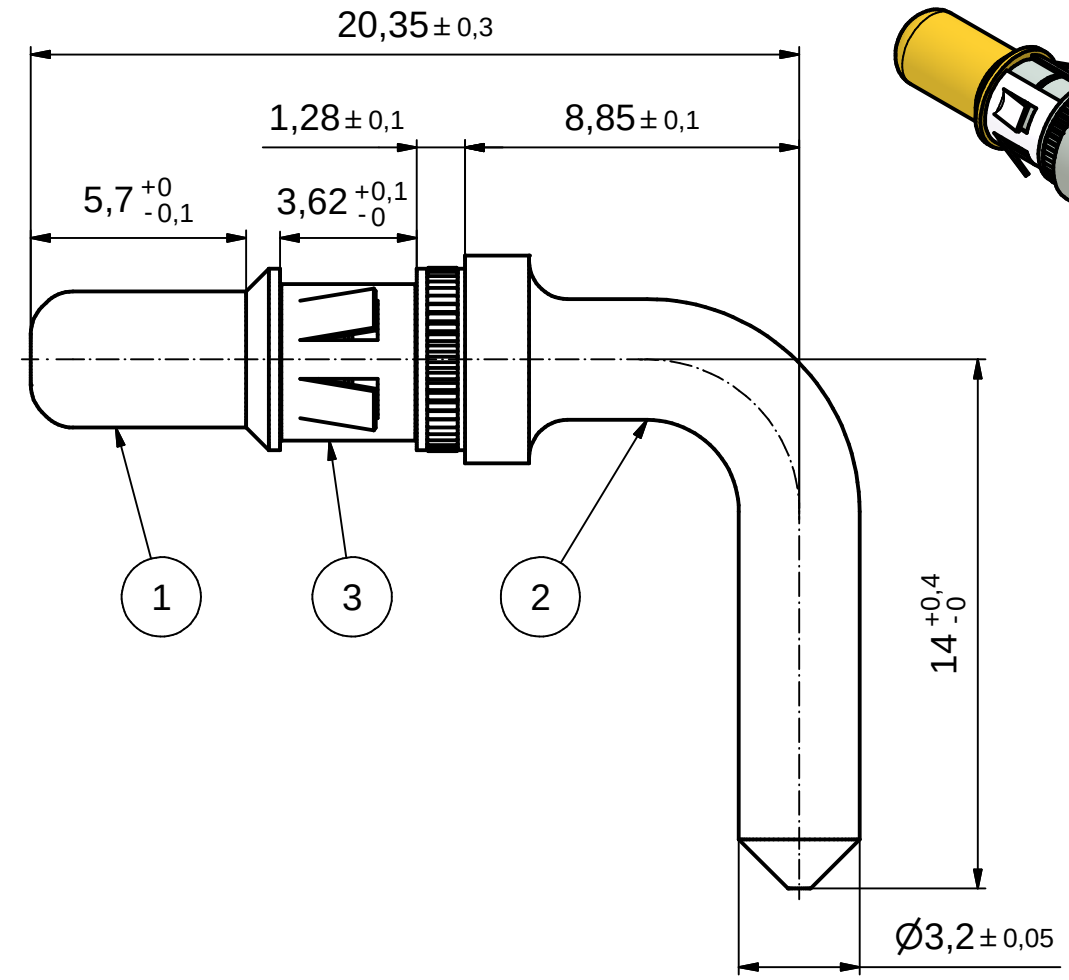

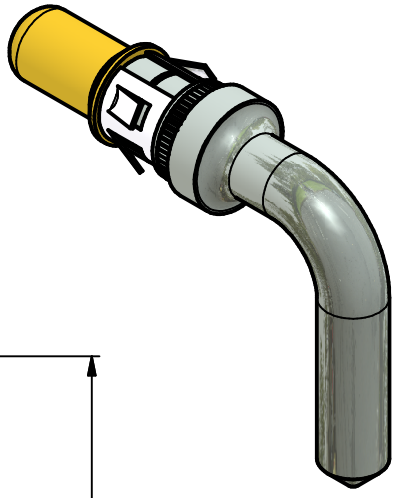

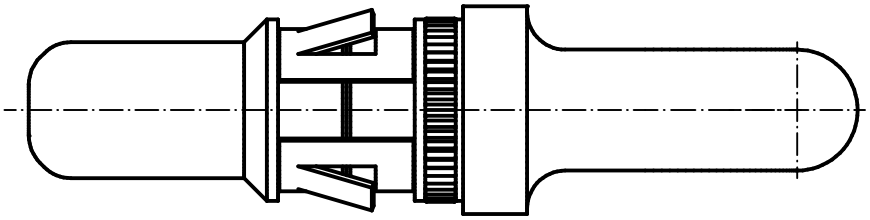

NOTES:

1. MATERIAL:
   ITEM 1+2: COPPER ALLOY
   ITEM 3: STAINLESS STEEL
2. PLATING:
   ITEM 1: SEE TABLE
   ITEM 2: TIN PLATED

PLATING ITEM 1	PART-NO.
8µ" HARD GOLD OVER min. 50µ" NICKEL	131A13070X
30µ" HARD GOLD OVER min. 50µ" NICKEL	131C13070X

Directive 2002/95/EC RoHS compliant

THIS DRAWING MAY NOT BE COPIED OR REPRODUCED IN ANY WAY, AND MAY NOT BE PASSED ON TO A THIRD PARTY WITHOUT WRITTEN PERMISSION. OWNERSHIP AND COPYRIGHT OF CONEC GmbH

DO NOT ALTER CAD DRAWING BY HAND

rev.	description	date	name
a	Original		

tolerance: dim. in mm

	date	name
drawn	21.06.2004	Schmidt
appd.	21.06.2004	Mickenbecker
norm		
d-old		

CONEC®

scale: 5:1

material: SEE NOTES

title:
HIGH POWER CONTACT MALE
SOLDER PIN 90°, Ø 3,2 , 30A
D-SUB COMBINATION

dwg no: 13K1A1154

DIN-A4

sh: 1

part no: SEE TABLE