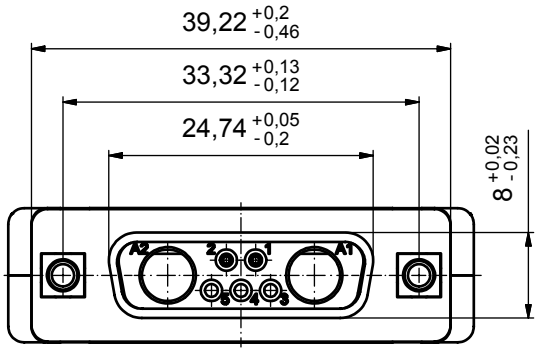

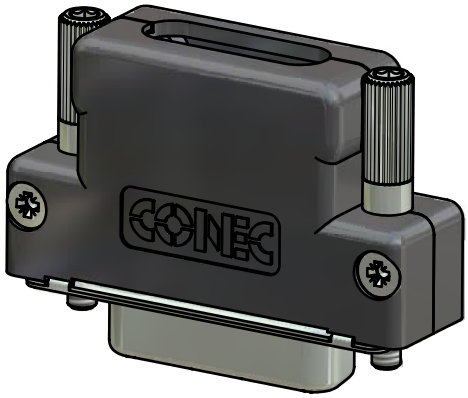

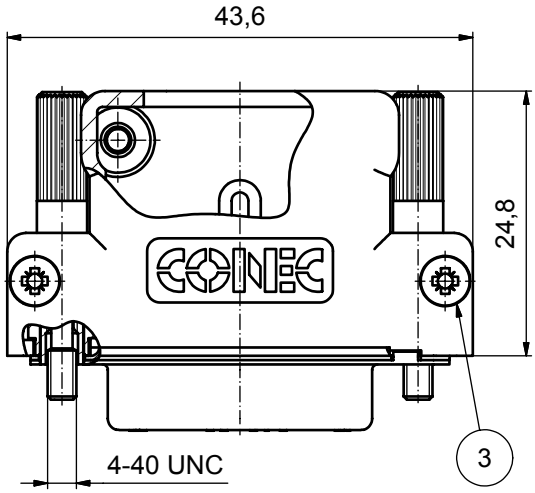

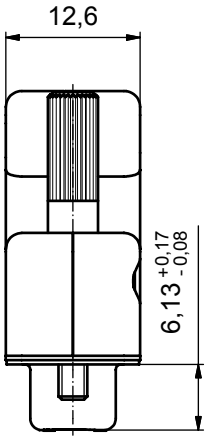

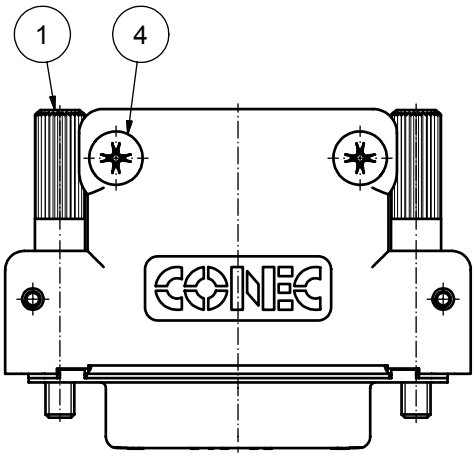

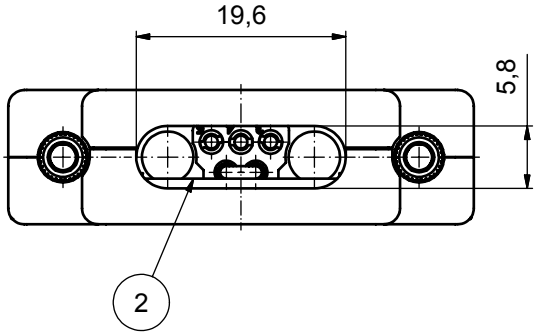

POS. 1

2x JACKSCREW 4-40 UNC
with allen wrench head

POS. 2

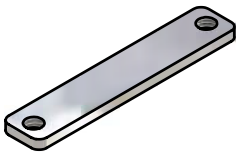

1x CABLE STRAIN RELIEF

POS. 3

2x COVER SCREW

POS. 4

2x CABLE STRAIN RELIEF SCREW

Directive 2002/95/EC
„RoHS"
Compliant

NOTES:

1. HOOD: PBT GF UL 94 V0
2. JACKSCREW 4-40 UNC: STEEL; NICKEL PLATED
3. SCREW FOR STRAIN RELIEF: STEEL; NICKEL PLATED
4. COVER SCREW: STEEL; NICKEL PLATED
5. STRAIN RELIEF: STEEL; NICKEL PLATED
6. FEMALE CONNECTOR 7W2, CRIMP STYLE WITH WIRE BRIDGE AWG 22
   SIGNAL CONTACTS: COPPER ALLOOY; 7,5A nominal
   PLATING: 30µin HARD GOLD over min. 50µin NICKEL
   FEMALE CONTACTS WIRE BRIDGE FROM POS. 1 TO POS. 2

APPROVAL # FREIGABE # DEBLOCAGE # AUTORIZACION # APPROVAL

CUSTOMER APPROVAL DATE:

NAME: TITLE:

COMPANY NAME:

APPROVAL # FREIGABE # DEBLOCAGE # AUTORIZACION # APPROVAL

THIS DRAWING MAY NOT BE COPIED OR REPRODUCED IN ANY WAY, AND MAY NOT BE PASSED ON TO A THIRD PARTY WITHOUT WRITTEN PERMISSION. OWNERSHIP AND COPYRIGHT OF CONEC GmbH

DO NOT ALTER CAD DRAWING BY HAND

rev.	description	date	name
a	Origin		

tolerance ISO 2768-m

dim. in mm

	date	name
drawn	18.07.08	Schmidt
appd.	18.07.08	Kühle
norm		
d-old		

CONEC®

scale: 2:1

material: see notes

title:
PLASTIC HOOD, straight cable exit
with 7W2 Female Crimp Connector
with wire bridge

dwg no: 13K1A2554

Inventor 10

DIN-A3

sh: 1

part no: 13-000391