Frontplattenausschnitt (Rückseite)

Panel cut out (rear side)

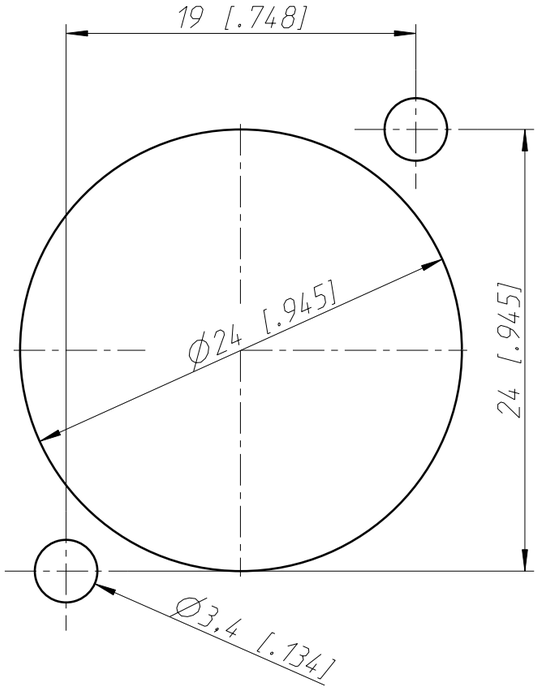

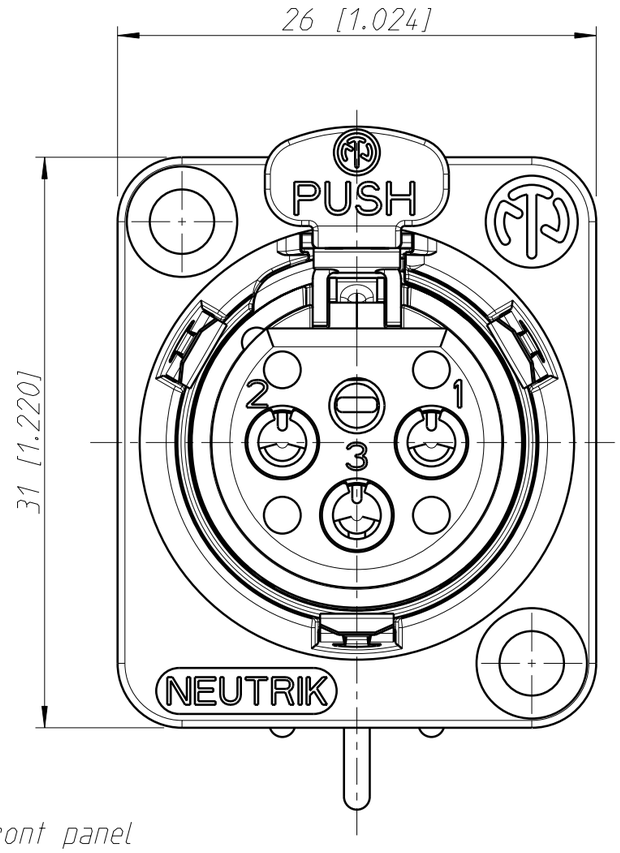

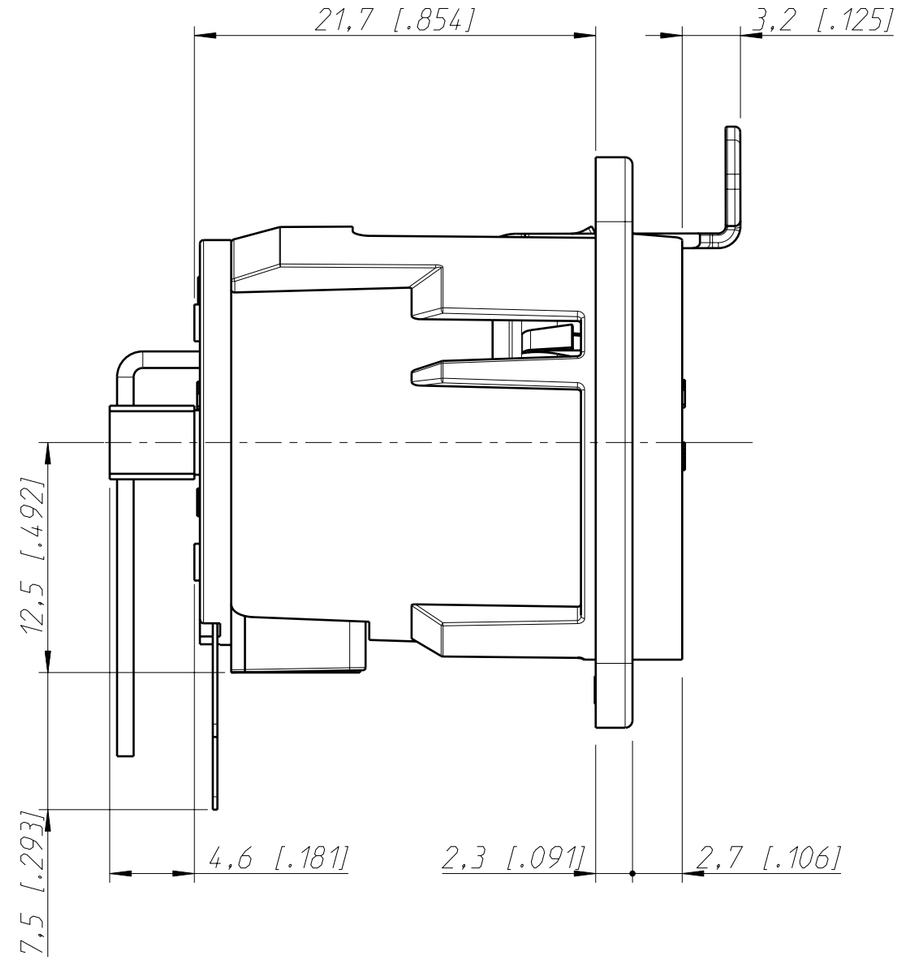

Print-Bohrplan (Bestückungsseite)

PCB-Layout (component side)

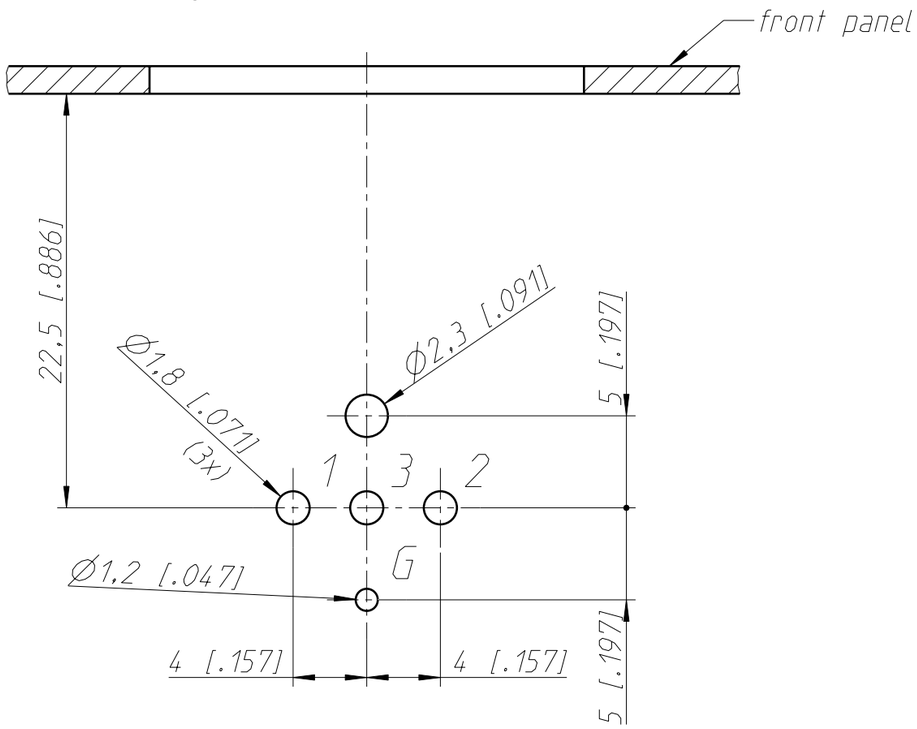

General tolerances ISO 2768-m	Scale		Date	Name
Refer to protection notice ISO 16016.	3:1 (A3)	Drawn	19.06.15	Dobler
Name –		Modified	28.07.17	Hofmann
NC3FD-H		Change-No. -	Sheet-No. 1 / 1	Index B
		Replacement for:		
NEUTRIK		Drawing-No. ST-NC3FD-H		