THIS DRAWING IS THE EXCLUSIVE PROPERTY OF MARQUARDT. WITHOUT THEIR CONSENT IT MAY NOT BE REPRODUCED OR GIVEN TO THIRD PARTIES.

CONFIDENTIAL

VERTRAULICH

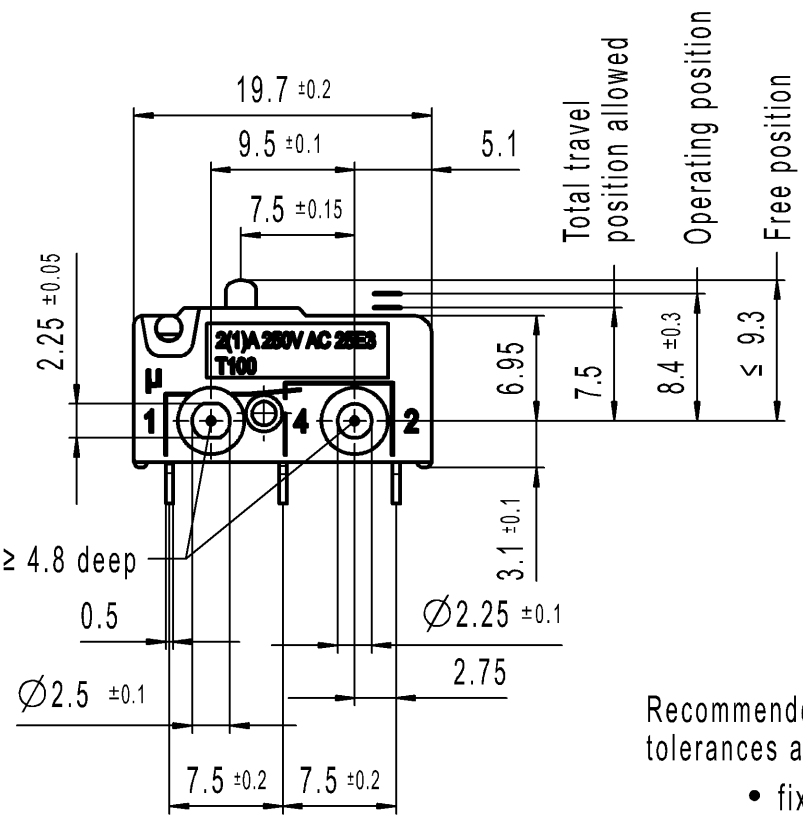

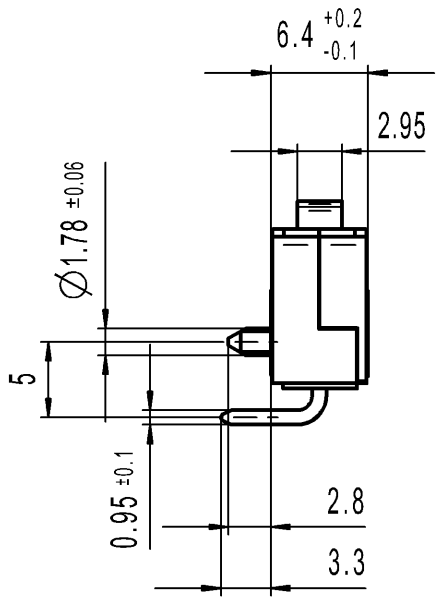

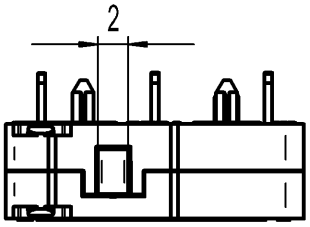

Recommended hole pattern component side
tolerances acc. to DIN IEC 326 part 3 very fine

• fixing hole
○ component

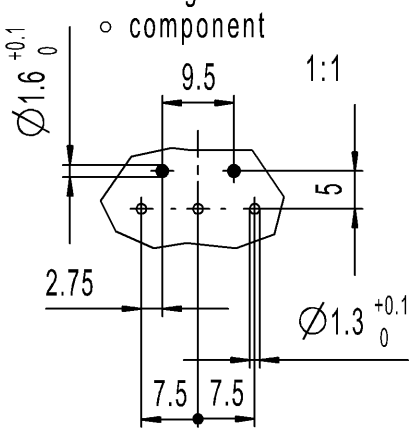

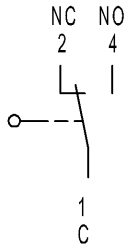

Marking
1050 μ

2(1)A 250V AC 25E3
T100

Code of manufacture:
place / year / week

Single Pole Changeover	
Actuating force	≤ 1.5 N
Release force	≥ 0.5 N
Movement differential	≤ 0.2 mm
Contacts gold plated	

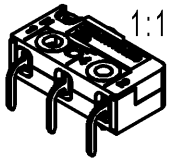

Figure	Type	Customer Part No.	Art.No.-PI
-	-	-	1050.3151-XX

Shape and location	Angle ± 2 °	Length			Radii	
	Edge tolerance	0-6	± 0.2	±	0-6	± 0.2
		>6-30	± 0.3	±	>6-30	± 0.3
			±	±		±
			±	±		±
			±	±		±
			±	±		±
			±	±		±
			±	±		±

Sheet	Format DIN	Projection	Scale
01	A4		1:1

All dimensions are in millimetres

System NX V1899

Replacement of Zg.gl.Nr.v.24.03.1994

Ident.	Document number	Index
K	10503151	d

Snap Action Switch

MARQUARDT

Index	MEC-No.	Date (YYYY-MM-DD)	Edited by
d	141307	2022-04-04	HHE
c	38135	2003-09-16	SIG
b	30390	2000-10-12	PFU
a	29543	2000-05-19	PFU

Alle Rechte bei Marquardt, auch fuer den Fall von Schutzrechtsanmeldungen. Jede Verfuegungsbefugnis, wie Kopier- und Weitergaberecht, bei uns.