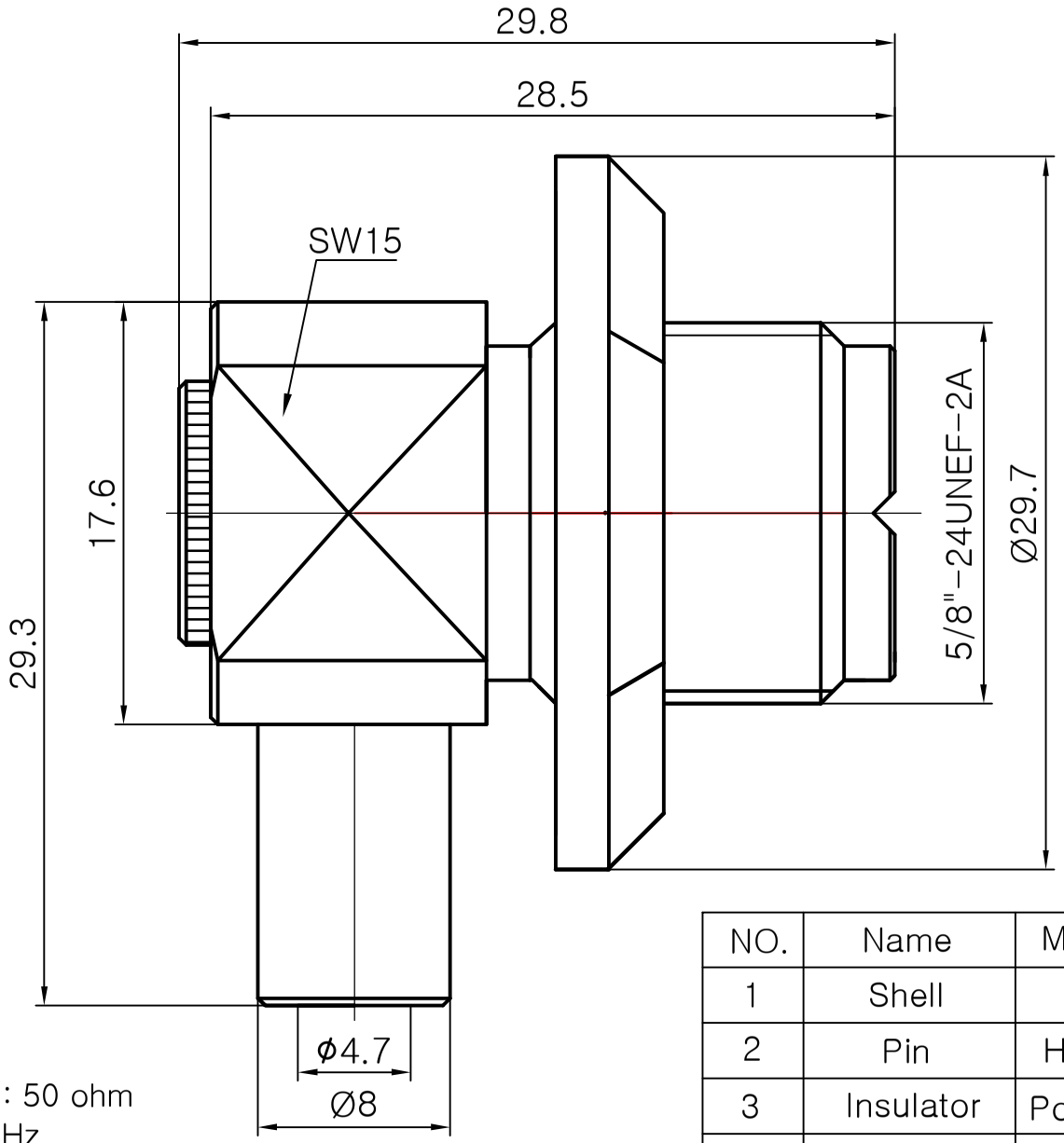

1.Characteristic Impedance: 50 ohm
2.Frequency Range: 0~3 GHz
3.Working Voltage: 500VRMS
4.Meet RoHS2.0 Requirents

NO.	Name	Materials	Plating	Remark
1	Shell	Brass	Nickel	
2	Pin	HPb59-1	Gold	
3	Insulator	Polystrene		
4	Nut	Zinc	Nickel	

Dim.Var		Describe	UHF Right Angle Female Connector RG58 Cable	
0.5~6	±0.10			
6~30	±0.20		Item NO.	R-810,RG58
30~120	±0.30			