Rating	10A 14VDC
Contact Resistance	50m ohm Max.
Insulation Resistance	DC 500V 100M ohm Min.
Dielectric Strength	AC 500V 1 minute
Operation Temperature	-20°C~+70°C
Switch Function	5P SPDT ON-(ON) (LED independent)

Mounting Hole

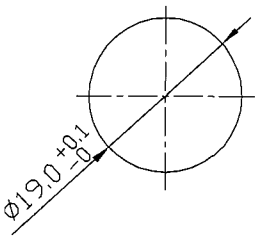

Thickness:0.7~10.0

Circuit Diagram

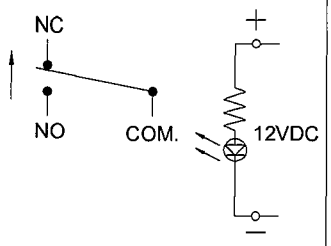

LED independent

*MATERIAL:
Frame: SUS304
Actuator: SUS304
Lens: PC, Red clear
LED: Red
Hex Nut: SUS304
Hosing: Black, PA#66
Bottom: Black, PBT+15%GF

*Water Proof: IP67 with Panel seal

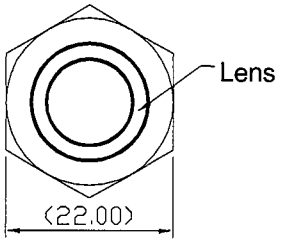

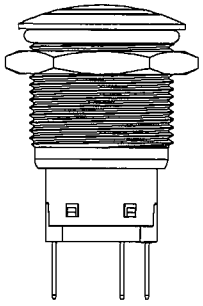

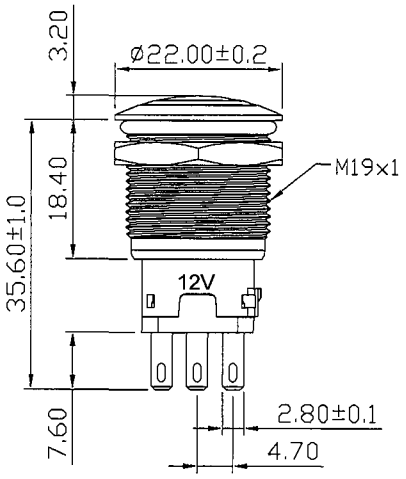

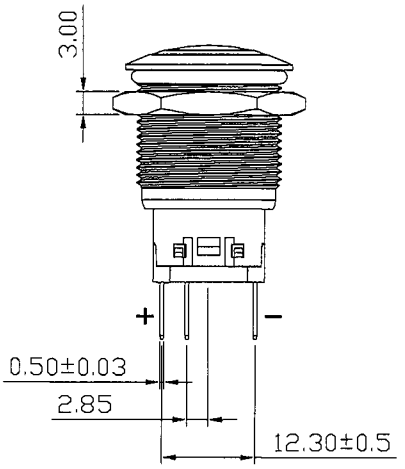

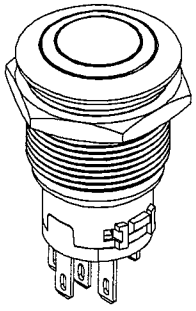

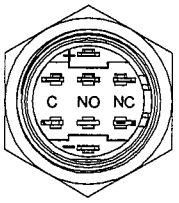

原稿
2018.3.28
研發部

tolerances Unless otherwise specificed ±0.3

C3\WORK14\R13-565A1-15-55RR-1

							△
							△
Date	Name	Descriptions					NO
Drawn	Checked	Approved	SCI BOM No.	1831419	Model Name	PUSH SWITCH	
B.S.Wang		王伯山	Customer No.		Model No.	R13-565A1-15-55RR-1	REV.
3/26/'18		3/28/18	Unit	mm	SHIN CHIN INDUSTRIAL CO., LTD.		0