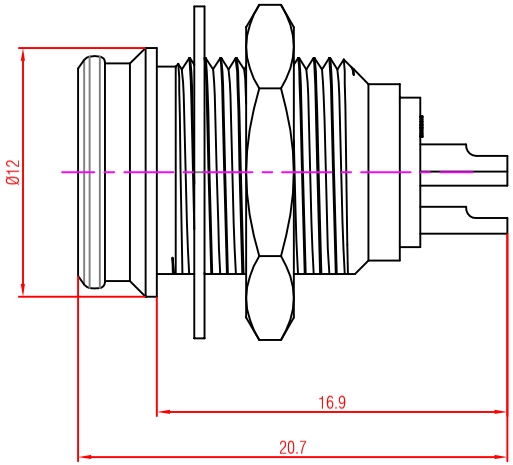

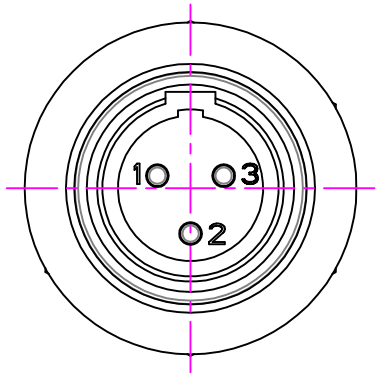

Note:
1. All dimensions in mm.
2. Tolerances not specified is ±0.20mm.

RT3MP-D	Blulk Packing	
RT3MP	Individual PE Bag	
Product Name	Packing Type	

Rev.	Revision Details	Date	Name

THIS DOCUMENT IS THE PROPERTY OF NEUTRIK. NO PART THEREOF MAY BE REPRODUCED AND USED WITHOUT THE PRIOR WRITTEN CONSENT OF THE OWNER

Material:

Scale: 4 : 1 (A3)

	Date:	Name:
Designer:	2020.11.11	Jie.Yu
Checked:	2020.11.11	Xiaonan.Wang
Approved:		

Title: Tiny XLR Male 3-Pin RT3MP

Replaced By: 1

Replaces: 1

REAN

Drawing No.: