Signature	Revision History	Date	Rev.
Sean	For Bulk Production	Sep.25,2013	01

RoHS Compliant

DVI (24+1)P MALE

DVI (24+1)P MALE

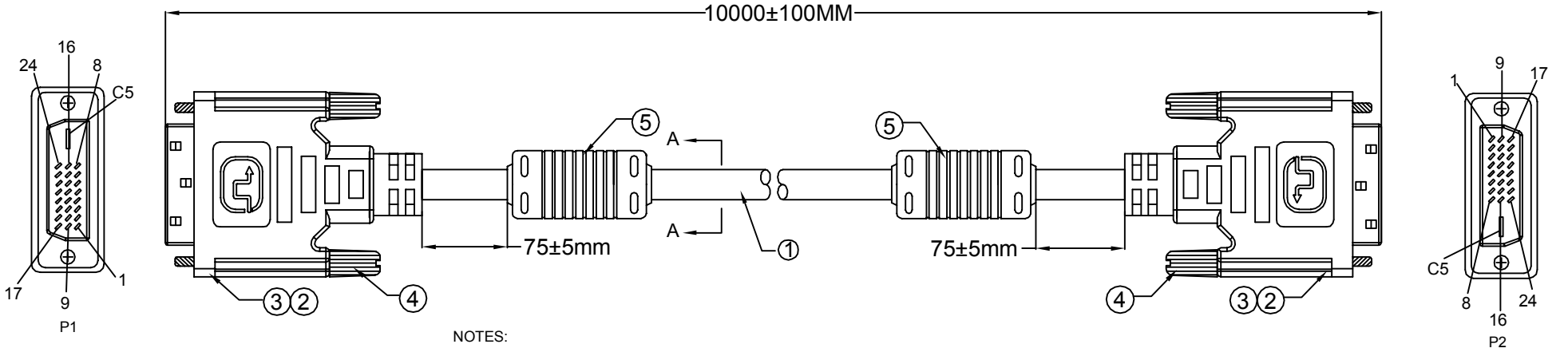

NOTES:

1.CABLE: UL 20276[26AWG(7/0.16BC)*1P +AL/MY]*7C+26AWG(7/0.16BC)*1P+26AWG(7/0.16BC)*3C
+26AWG(7/0.16BC)+AL/MY+B(65% COVERAGE ALM) OD=11.0±0.30mm JACKET COLOR: BLACK
CABLE MUST PRINT: E****** AWM 20276 80°C 30V VW-1

2.CONNECTOR:
P1&P2: DVI (24+1)P/M,SOLDER,BLACK INSULATION, GOLD FLASH PLATED CONTACTS, NICKEL PLATED SHELL

3.HOOD: MOLDED TYPE,ABS,COLOR:BLACK.

4.THUMB SCREW: #4-40 UNC, MOLDED TYPE,PVC 45P,COLOR:BLACK

5.FERRITE CORE: (Ø17.5 X Ø9.5 X 28.5mm), MOLDED BLACK PVC.

6.ELECTRICLE TEST:
(1)100% OPEN SHORT & MIS WIRE TEST.
(2)CONTACT RESISTANCE 5 ohm Max .
(3)INSULATION RESISTANCE 10M ohm Min .
(4)HI-POT TEST:DC 300V/10ms

PIN ASSIGNMENT

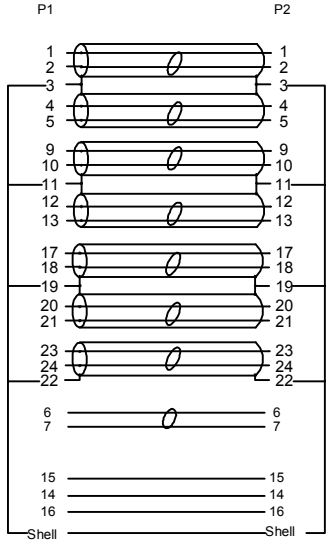

Cross Section:

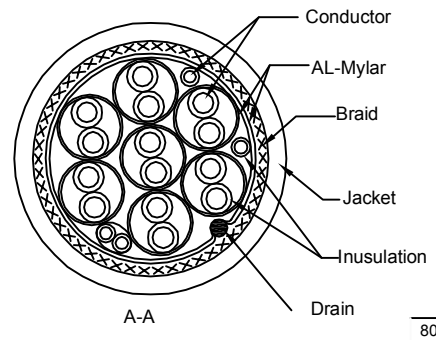

	Date	Name
Drawn by	Sep.25,2013	Sean
Checked by	Sep.25,2013	Joe
Approved by	Sep.25,2013	Andy

ASSMANN
Electronic GmbH

80496

Part No.

AK-320101-100-S

EAN:4016032297987

Title

DVI (24+1)P/M - DVI (24+1)P/M CABLE

Scale	N/A	Sheet
Unit	MM	1/2

Signature	Revision History	Date	Rev.
Sean	For Bulk Production	Sep.25,2013	01

Package Details

RoHS Compliant

Single Cable

P/N	Cable Length	Rolling Size (Single Cable)	Polybag Type (Single Cable)	Bag Size (Single Cable)	Article Weight (Single Cable)
AK-320101-100-S	10m	mm max.	Ordinary Polybag (Heat Sealed)	*0.05mm	kg

Inner Packing Unit

P/N	Cable Length	Quantity (Inner Packing Unit)	Type (Inner Packing Unit)	Size (Inner Packing Unit)	Weight (Inner Packing Unit)
AK-320101-100-S	10m	10 pcs	Polybag (Heat Sealed)	*0.05mm	kg

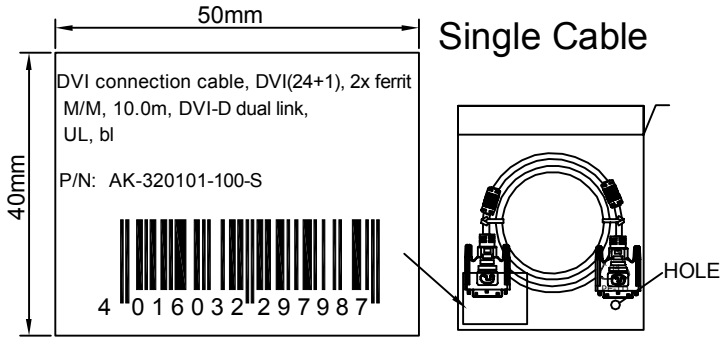

Single Cable

CARTON DETAILS

P/N	Cable Length	Quantity (Carton)	Measurement (Carton)	N.W. (Carton)	G.W. (Carton)
AK-320101-100-S	10m	pcs	cm	kg	kg

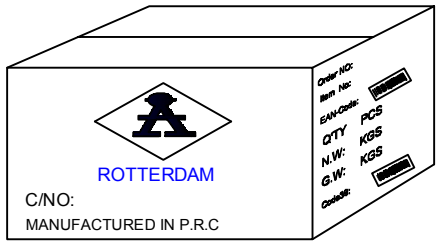

* "ROTTERDAM" is for Sea Freight shipment
* "COLOGNE" is for Air Freight shipment
* "LUDENSCHEID" is for Fedex or UPS shipment

	Date	Name
Drawn by	Sep.25,2013	Sean
Checked by	Sep.25,2013	Joe
Approved by	Sep.25,2013	Andy

ASSMANN Electronic GmbH

80496

Part No.

AK-320101-100-S

EAN:4016032297987

Title

DVI (24+1)P/M - DVI (24+1)P/M CABLE

Scale	N/A	Sheet
Unit	MM	2/2