RoHS Compliant

REV	DATE	ECN NO.	APPROVER
D	04/12-21	ECN202104004	Chen Bo

THIS IS CAD DRAWING, DO NOT REVISE MANUALLY!!!

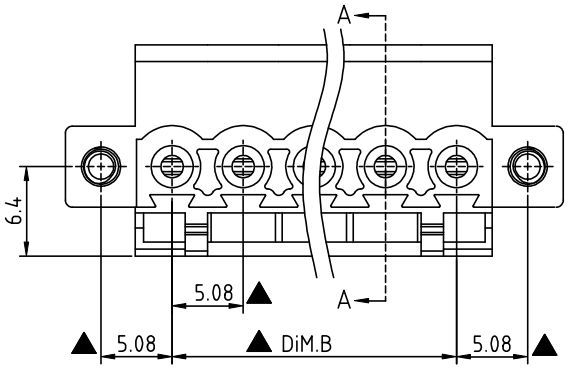

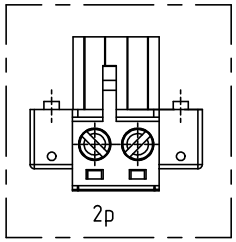

Material

- Item a Terminal body:PA66 (UL94V-0)
- Item b Terminal cover:PA66 (UL94V-0)
- Item c Female contact:PhBz ,Bright Tin plated over Nickel plated
- Item d Clamp:Brass, Ni plated
- Item e Terminal screw:Steel Zinc plating "-" slot type
- Item f With flange screw:steel M2.5 Zinc plated "+/-" slot type

Electrical cULus

- Voltage rating:300V
- Current rating:12A
- Solid wire(AWG):12-24
- Stranded wire(AWG):12-24
- Torque(Lb-In): 5
- Screw: M3
- Wire strip length: 7-8mm
- Withstanding Voltage: 1.6KV
- Operating temperature: -40°C to +115°C
- Safety Approval: c us
- Critical dimension: ▲

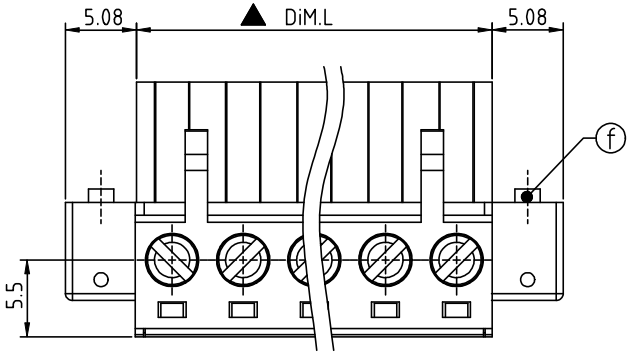

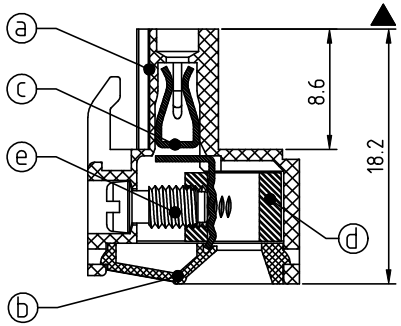

SECTION A-A

TJ xx 51 x 7 xxxx G

- No. OF POLES
  - 02: 2 POLES
  - 24: 24 POLES
- Color
  - 0 Black (RAL9005)
  - 3 Orange(RAL2011/P)
  - 4 Yellow(RAL1018/A)
  - 5 Green(RAL6018/T)
  - 6 Blue (RAL5015/A)
  - 8 Grey(RAL7035/D)
  - 9 White(RAL1102)
  - C Green(RAL6018/U)
- xxxx
  - 0000: "@" Logo
  - 000A: "ANYTEK" Mark
  - Any special item by customer requst. please contact sales department.
- G RoHS compliant (lead<4%) In copper Alloy

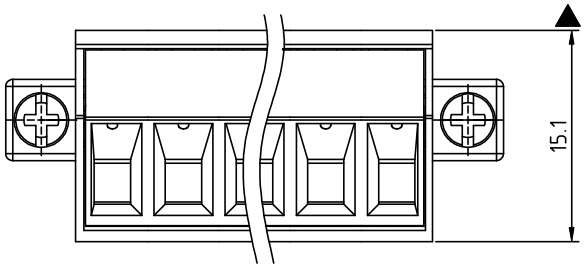

DIMENSION

Dim L	Nx5.08
Dim B	(N-1)x5.08

N= NUMBER OF CONCATS

Poles	Dim L/B Tolerance
2P-5P	±0.15
6P-10P	±0.20
11P-15P	±0.25
16P-20P	±0.30
21P-24P	±0.40

Amphenol ANYTEK

CUSTOMER COPY

ALL RIGHTS RESERVED. REPRODUCTION OR ISSUE TO THIRD PARTIES IN ANY FORM WHATEVER IS NOT PERMITTED WITHOUT WRITTEN AUTHORITY FROM THE PROPRIETOR. PROPERTY OF ANYTEK TECHNOLOGY CO., LTD

TITLE	TJ 5.08 Series With flange contact on up side				
PART NO.	TJxx51x7xxxxG			DWG NO.	8TJ0A02
APPROVED	CHECKED	DESIGNED	DRAWN	CUST NO.	
		Chen Bo 04/12-21	Chen Bo 04/12-21	UNIT: mm / SCALE: NONE / SHEET: 01/01 / REV.: F	

Tolerance	
X.	±0.50
X.X	±0.30
X.XX	±0.10
X°	±1°