Oct.1.2023 Copyright 2023 HIROSE ELECTRIC CO., LTD. All Rights Reserved.
In case of consideration for using Automotive equipment / device which demand high reliability, kindly contact our sales window correspondents.

6 Fig.2(1:1)

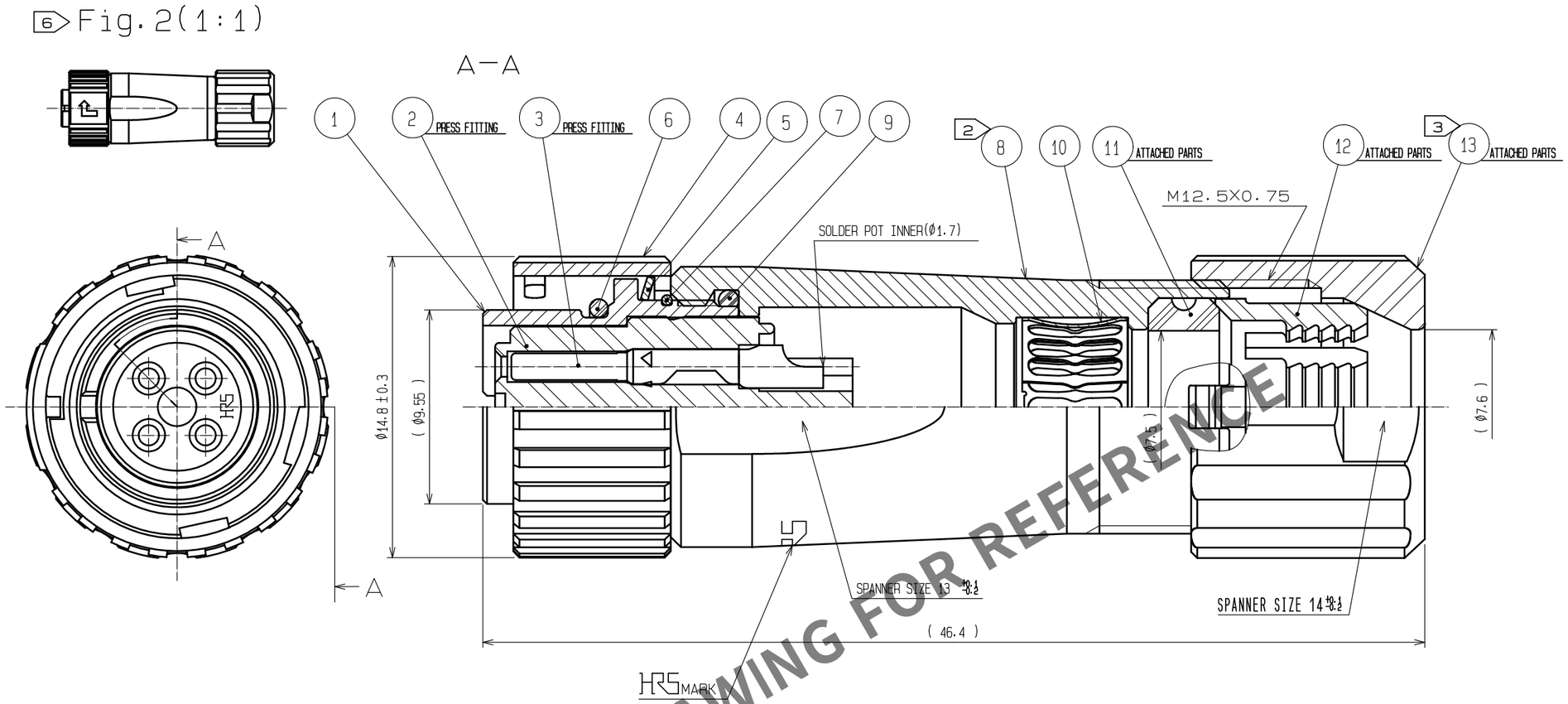

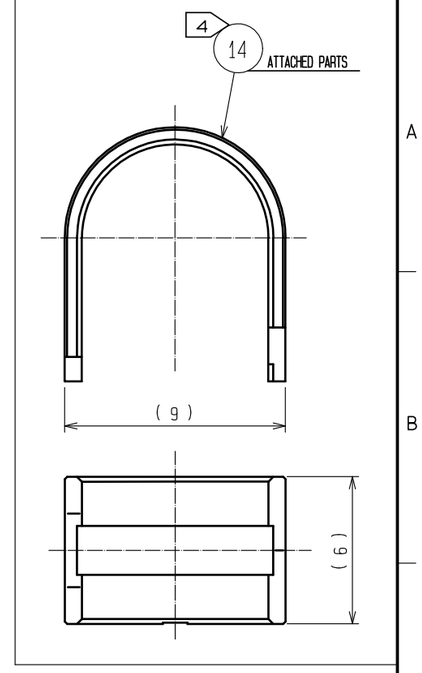

Fig.1(2:1)

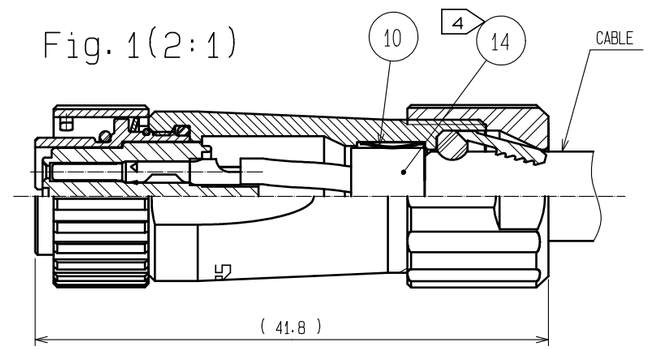

HRS DRAWING FOR REFERENCE

NOTES
1 PLATING(REF.NO.③)
CONTACT AREA : GOLD 0.2μm min
OTHERS : GOLD AND NICKEL
UNDER PLATING : NICKEL 2μm min
2 THE RECOMMENDED CLAMP TORQUE OF REF.NO.⑧ TO BE 1 TO 1.5N·m.
THREAD LOCKER TO THE THREADED PORTION OF REF.NO.① IS RECOMMENDED TO PREVENT REF.NO.⑧ FROM LOOSING.
RECOMMENDED THREAD LOCKER : LOCTITE 263, HENKEL JAPAN LTD.
3 THE RECOMMENDED CLAMP TORQUE OF REF.NO.⑬ TO BE 0.8 TO 1N·m.
THREAD LOCKER AND LOCK PRIMER TO THE THREADED PORTION M12.5X0.75 OF REF.NO.⑧ IS RECOMMENDED TO PREVENT REF.NO.⑬ FROM LOOSING.
RECOMMENDED THREAD LOCKER AND LOCK PRIMER : LOCTITE 263, LOCK PRIMER 7649, HENKEL JAPAN LTD.
4 FASTEN REF.NO.⑭ TO THE CABLE WITH THE CABLE CRIMPING TOOL.
AND MAKE REF.NO.⑭ CONTACT WITH REF.NO.⑩ (REFER TO Fig.1).
REFER TO THE TECHNICAL SPECIFICATION ETAD-C0099 FOR DETAILS.
APPLICABLE CABLE CRIMPING TOOL : LF-TC-01 (CL150-0234-6)
5 APPLICABLE CABLE ASSEMBLY FIXTURE : LF10BP-T01 (CL150-0235-9)
CABLE ASSEMBLY FIXTURE IS USED AS A RECEPTACLE STAND OF EXTRACT AND THE PART NUMBER ① OF AN ASSEMBLY.
6 Fig.2 SHOWS THE APPEARANCE AFTER ASSEMBLY.
7 ROTATION EXAMPLES OF REF.④, ⑧ AND ⑬ TO ① ARE SHOWN.
8 CABLE PULL FORCE, TWISTING STRENGTH, WATER TIGHTNESS AND OTHER CHARACTERISTICS MAY DIFFER DEPENDING ON CABLE SPECIFICATIONS AND STRUCTURE.
PLEASE EVALUATE UNDER THE ACTUAL CONDITIONS PRIOR TO USE.

NO.	MATERIAL	FINISH , REMARKS	NO.	MATERIAL	FINISH , REMARKS
7	STAINLESS STEEL		14	BRASS	NICKEL PLATING
6	CHLOROPRENE RUBBER	(BLACK)	13	PPS	(NATURAL, BROWN) UL94V-0
5	STAINLESS STEEL		12	POLYAMIDE	(NATURAL, MILKY WHITE) UL94V-0
4	ZINC ALLOY	NICKEL PLATING	11	CHLOROPRENE RUBBER	(BLACK)
3	COPPER ALLOY	1	10	PHOSPHOR BRONZE	NICKEL PLATING
2	PPS	(BLACK) UL94V-0	9	CHLOROPRENE RUBBER	(BLACK)
1	ZINC ALLOY	NICKEL PLATING	8	ZINC ALLOY	NICKEL PLATING

UNITS	SCALE	COUNT	DESCRIPTION OF REVISIONS	DESIGNED	CHECKED	DATE
mm	4 : 1	0				

HIROSE ELECTRIC CO., LTD.

APPROVED	HY. KOBAYASHI	18. 02. 21
CHECKED	HY. KOBAYASHI	18. 02. 21
DESIGNED	TY. SUZUKI	18. 02. 21
DRAWN	HM. SAITO	18. 02. 21

DRAWING NO. EDC-114240-31-00
PART NO. LF10WBP-4S(31)
CODE NO. CL136-0005-2-31
0 1/1

FORM HC0011-5-7