THIS DOCUMENT IS THE PROPERTY OF KEYSTONE ELECTRONICS CORP. AND SHALL NOT BE REPRODUCED, DISTRIBUTED OR USED AS A BASIS FOR MANUFACTURE WITHOUT PRIOR WRITTEN PERMISSION FROM KEYSTONE ELECTRONICS CORP.

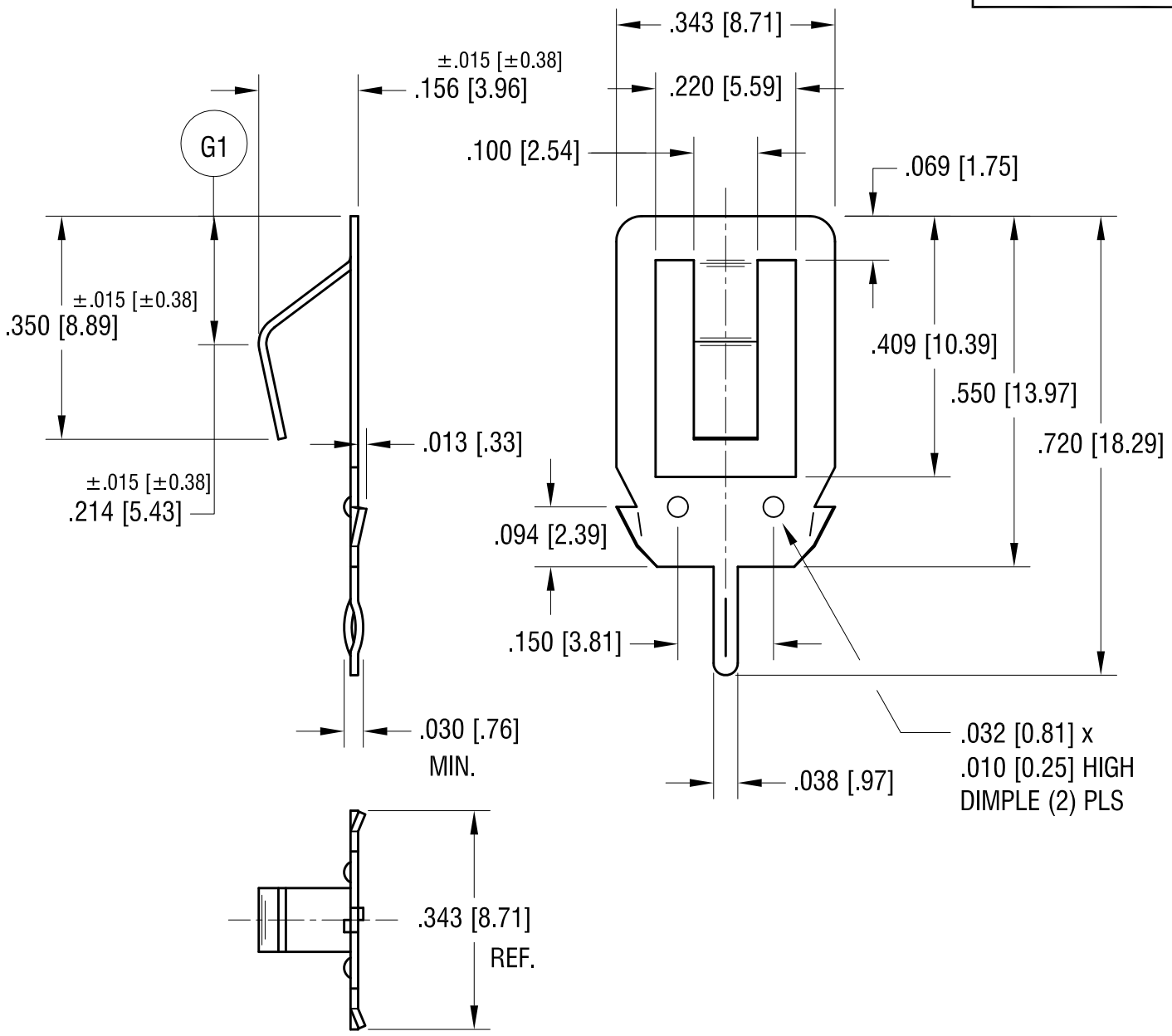

NOTE:
1. MOUNTING HOLE: .047 [1.20]

G1 WAS .200 [5.08]±.015 [±0.38]

DATE	DESCRIPTION	REV.
11.04.19	CHANGE AS PER ECN 19–083	G
8.27.09	CHANGE AS PER ECN 09–121	F
8.27.04	CHANGE AS PER ECN 04–076	E

KEYSTONE ELECTRONICS CORP.

www.keyelco.com • NEW HYDE PARK, NY 11040 • Tel (516) 328-7500

PART NAME	PC BATTERY CONTACT		
MATERIAL	.012 [0.30] TH'K STAINLESS STEEL, FULL HARD		
FINISH	TIN NICKEL PLATE	DRN BY BOONE	DATE 5.17.93
		APP'D RH	SCALE 4X
TOLERANCES INCH [MM] DECIMAL ± .005 [± 0.13] ANGULAR ± 1° UNLESS OTHERWISE SPECIFIED	CODE C	DWG NO. 108-2	