OptoSupply
Light It Up

Premium 0.5 Power 4.8mm Straw Yellow LED

OSY5XD56E1R-150MA

■Features

- Highest Luminous Flux
- Long Lifetime Operation
- Low Thermal resistance
- Water Clear Type

■Applications

- Read lights (car, bus, aircraft)
- Bollards / Security / Garden
- Small Area Illuminations
- In door / Out door Commercial lights
- Automotive Ext

■Outline Dimension

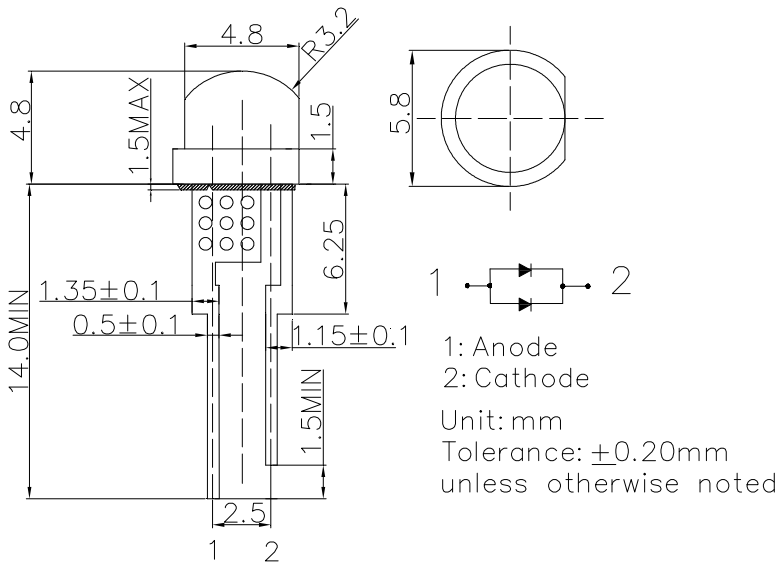

■Absolute Maximum Rating (Ta=25℃)

Item	Symbol	Value	Unit
DC Forward Current	I_F	200	mA
Pulse Forward Current#	I_{FP}	250	mA
Reverse Voltage	V_R	5	V
Power Dissipation	P_D	520	mW
Operating Temperature	Topr	-30 ~ +85	℃
Storage Temperature	Tstg	-40~ +100	℃
Lead Soldering Temperature	Tsol	260℃/5sec	-

#Pulse width Max.10ms Duty ratio max 1/10

■Directivity

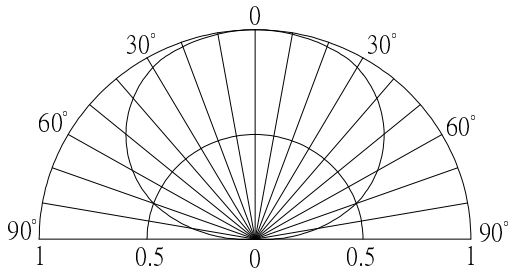

■Electrical -Optical Characteristics (Ta=25℃)

Item	Symbol	Condition	Min.	Typ.	Max.	Unit
DC Forward Voltage*1	V_F	I_F=150mA	-	2.2	2.6	V
DC Reverse Current	I_R	V_R=5V	-	-	10	μA
Luminous Flux*2	Φ_V	I_F=150mA	16	18	-	lm
Luminous Intensity*3	I_V	I_F=150mA	7000	8400	-	mcd
Domi. Wavelength*4	λ_D	I_F=150mA	585	590	595	nm
50% Power Angle	$2\theta_{1/2}$	I_F=150mA	-	140	-	deg

*1 Tolerance of measurements of forward voltage is±0.1V
*2 Tolerance of measurements of luminous flux is ±15%
*3 Tolerance of measurements of luminous intensity is ±15%
*4 Tolerance of measurements of dominant wavelength is ±10%

LED & Application Technologies

CNAS IAF ISO 9001: 2008
www.optosupply.com RoHS Compliant EU 2002/95/EC
REACH The new EU chemicals legislation
ATTENTION OBSERVE PRECAUTIONS ELECTROSTATIC SENSITIVE DEVICES